BUILDING ACCESSIBILITY HANDBOOK 2020

Illustrated Commentary on Accessibility Requirements
British Columbia Building Code 2018

BRITISH COLUMBIA

Office of Housing and
Construction Standards

ISBN 978-0-7726-7945-1

Table of Contents

Dedication and Acknowledgments 2
Introduction 3
Preface 4
New Organization and Content Identification in the 2018 Edition. 5
Legend 6
Division A – Part 1 Compliance. 7
Division B – Section 3.8. Accessibility 9
Division B – Section 3.2. Building Fire Safety 117
Division B – Section 3.3. Safety within Floor Areas 121
Division B – Section 3.4. Exits 132
Division B – Section 3.5. Vertical Transportation 137
Division B – Section 3.7. Health Requirements 139
Division B – Part 9 Housing and Small Buildings. 142
Division C – Section 2.2. Administration 147
Division A – Part 2 Objectives 148
Division A – Part 3 Functional Statement 151
Appendices 153
- Slip-resistance. 154
- Handrails 156
- Wheelchair Dimensions 158
- Reach 159
- Classification of Building Use. 161
- Explanation of Building Height and Building Area 165
- Other Standards. 166
- Programs and Resources 167

Dedication

This handbook is dedicated to the memory of Edmund J. Desjardins to honour his commitment and leadership to remove architectural barriers for people with disabilities. Mr. Desjardins devoted his life to developing rehabilitation services and designing public facilities to enhance accessibility for people with disabilities. During his time as Chairman of the Architectural Committee for Social Planning and Review Council of British Columbia, he developed comprehensive design standards that the City of Vancouver adopted into its building bylaw. In 1975, Edmund was appointed the Order of Canada, and in 1991, he received the Order of British Columbia for his remarkable service.

Edmund J. Desjardins

Acknowledgments

The Building and Safety Standards Branch appreciates the respected individuals and organizations who contributed their time and expertise to support this edition of the Building Accessibility Handbook.

This handbook was prepared with support from the Accessibility Secretariat. The Accessibility Secretariat works with government and the disability community on provincial accessibility initiatives.

New illustrations created for this handbook were produced by Kristin Agnello, RPP, MCIP, Founder and Director with Plassurban. The illustrations build upon the original artwork done by Edward J. de Grey, MAIBC, MRAIC, in the 1984 edition of the handbook.

Working together, we are building a better, more accessible British Columbia for people with disabilities.

Introduction

Accessibility in the built environment is more important than ever. British Columbians with disabilities are a large population that is growing each year. In 2017, more than 926,000 British Columbians aged 15 and older, nearly 25 percent of British Columbia's population, identified as having a disability. [1]

The Province of British Columbia is committed to making British Columbia a truly inclusive province for people with disabilities. An important part of this work is removing physical and social barriers and making buildings and public spaces more accessible. Providing accessible spaces empowers people of all abilities to live, work and play in their communities. Accessibility makes it possible for people to participate safely, independently and with confidence. This is a key step towards creating an inclusive, welcoming environment for all members of our society.

The Province of British Columbia is also committed to creating fair opportunities for all British Columbians. In 2019, Gender Based Analysis Plus (GBA+) was adopted as a provincial initiative to assess how different people experience different policies, programs and services. The Building and Safety Standards Branch applied the GBA+ principles to learn about people's experience using the previous handbook to understand which features people found useful and those that could be improved. Based on GBA+ considerations and consultation feedback, significant updates were made to enhance the commentary readability, provide inclusive illustrations and apply online accessibility that will help more people find and understand the information they require to make buildings more accessible.

This handbook is a valuable resource designed to provide Building Code requirements, explanatory text (referred to within the handbook as commentary) and illustrations to support users to apply the British Columbia Building Code requirements to make buildings more accessible for people with disabilities.

With the commentary and illustrations contained in the handbook, users will have a better understanding of how the accessibility requirements can be implemented. Thoughtful and careful use of this handbook will benefit all members of the community as we work towards making British Columbia a leader in accessibility. These requirements should be considered as the floor, not the ceiling, for accessibility efforts. Users are encouraged to go beyond these minimum requirements to design and construct accessible buildings. Other legislation and regulations to support people with disabilities may require design and construction beyond the minimum Code requirements.

[1] Statistics Canada. Table 13-10-0374-01 Persons with and without disabilities aged 15 years and over, by age group and sex, Canada, provinces and territories

Preface

This edition of the Building Accessibility Handbook, an update of the 2014 edition, is compatible with the British Columbia Building Code 2018. The British Columbia Building Code governs how new construction, building alterations, repairs and demolitions are completed and establishes minimum requirements for accessibility. The Province of British Columbia is now offering the British Columbia Building, Plumbing and Fire Codes online at no charge. Visit bccodes.ca/index.html to access British Columbia Codes online.

Although the British Columbia Building Code is based on the National Building Code of Canada, British Columbia's unique accessibility requirements preceded and varied considerably from prior National Building Code requirements. The 2015 edition of the National Building Code contains many updates over previous editions to increase accessibility in buildings and align with the requirements and approaches of most Canadian jurisdictions, including those of British Columbia.

B.C. is committed to making buildings more accessible for people with disabilities. The British Columbia Building Code 2018 requires a greater level of building accessibility by combining the requirements of the National Building Code 2015 with British Columbia's historical requirements. In aligning more closely with the National Building Code, the British Columbia Building Code achieves greater consistency not only with the national requirements, but also with codes from other Canadian jurisdictions. To participate in the development of codes, submit code change requests to the National Research Council of Canada.

The illustrations and commentary in this handbook have been developed to assist Code users to understand the diverse and complex building requirements for Accessibility in Section 3.8. of Division B and throughout the Code. Although this handbook was initially developed for designers and building officials, it also serves as a reference for anyone wishing to advocate for a more accessible built environment.

This handbook provides information on the reasons for certain requirements. It also offers suggestions, through text and illustrations, on how many of the requirements can be implemented. By providing this information, it is hoped that users will have a better understanding of, and appreciation for, the Code's requirements and be better able to design and construct accessible buildings.

It is important to note that the commentary and illustrations within the handbook only represent the views of the contributors. These opinions cannot be read as legal interpretations of the British Columbia Building Code requirements.

This handbook is not a design guide or training manual and does not replace formal Code education. Accessible spaces should be designed by qualified individuals who have been properly trained on accessible building systems and design. The Building Code establishes the scope and application for the handbook content.

Comments on this handbook may be submitted to the Building and Safety Standards Branch by email to Building.Safety@gov.bc.ca.

New Organization and Content Identification in the 2018 Edition

Reorganization of Section 3.8.

To improve clarity and ease of use, the application and design provisions in Section 3.8. of Division B have been separated and regrouped according to subject matter into three Subsections: Scope, Application and Design.

Section 3.8. of the British Columbia Building Code 2018 has been significantly revised from the 2012 edition. The National Building Code format and requirements have been substantially adopted; many of the British Columbia Building Code's historical variations have been amended and retained.

The reference numbers and letters associated with the requirements in this handbook are the reference numbers and letters from the British Columbia Building Code 2018. In this handbook, the Notes are inserted following the provision. This is done for convenience in this handbook, but is not how the British Columbia Building Code 2018, nor the National Building Code 2015 are organized. Notes in the British Columbia Building Code 2018 are grouped by section and are contained after each section, similar to how the Appendix notes appeared in the 2012 edition. ("Appendix notes" are now referred to as "Notes" and have no legal effect.)

Change Indication

Technical changes and additions relative to the 2012 edition of the British Columbia Building Code are identified by using colour and underlining wherever practical. The colour and underlining is for convenience only and have no legal effect. No change indication is provided for renumbered or deleted provisions.

The term "reserved" is included in place of certain model National Building Code content which has not been adopted. The term reserved is generally used so that the numbering structure of the British Columbia Codes is aligned with the model National Codes, easing comparability and possible future harmonization.

Legend

To assist with content identification in this handbook, the following legend describes the conventions used to display the British Columbia Building Code 2018 language, including Notes. These conventions are not shown on intent statements or on commentary unique to this handbook.

Legend

Black: Model 2015 National Building Code content.

Blue: New 2015 National Building Code content that was not in the 2010 edition of the National Building Code.[2]

Blue underline: New British Columbia content that was not in the 2012 edition of the British Columbia Building Code.

Deletions and re-numbered content are not shown.

Dashed blue box and underline Internet links to external websites for more information, resources and programs.

Intent statements and attributions[3] are shown to the right of the provision to which they are applied in BC Sans font.

Commentary unique to this handbook appears in light grey boxes in BC Sans font.

[2] Content reproduced from the Code, including Notes and attributions, are not linked to external sources.

[3] Objectives and functional statements are attributed to the acceptable solutions in Division B of the British Columbia Building Code. In this handbook, they are included with intent statements and displayed in BC Sans font, even though attributions are not commentary. Attributions in this handbook are reproduced from Tables 3.10.1.1. and 9.37.1.1. of Division B of the British Columbia Building Code.

Only the British Columbia Building Code content directly related to accessibility is reproduced in this handbook.

Section 1.4. Terms and Abbreviations

1.4.1. Definitions of Words and Phrases

1.4.1.2. Defined Terms

Words in italics are defined in Part 1 of Division A of the British Columbia Building Code. Only the words and terms directly describing accessibility are reproduced below.

Sentence 1.4.1.1.(1) states: "Words and phrases used in this Code that are not included in the list of definitions in Article 1.4.1.2. shall have the meanings that are commonly assigned to them in the context in which they are used, taking into account the specialized use of terms by the various trades and professions to which the terminology applies."

1) The words and terms in italics in this Code shall have the following meanings:

Access or accessible means an area and its facilities, or both, as required by this Code, which is easy to approach, enter, exit, operate, participate in, pass to and from, and use safely and independently by *persons with disabilities*. (See Note A-1.4.1.2.(1).)

Adaptable dwelling unit means a *dwelling unit* designed and constructed to facilitate future modification to provide *access*.

Persons with disabilities means persons who have a permanent or temporary physical, mental, intellectual or sensory impairment which, in interaction with various barriers, may hinder their full and effective participation in society on an equal basis with others. (See Note A-1.4.1.2.(1).)

A-1.4.1.2.(1) Defined Terms.

Access or Accessible and Persons with Disabilities

The terms "access" or "accessible" and the term "persons with disabilities" are revised in this edition of the Code for greater alignment with the United Nations (UN) Convention on the Rights of Persons with Disabilities. This does not alter the objectives and functional statements attributed to the provisions of this Code regarding access for persons with disabilities. The revised definitions are to provide greater clarity as to why the Code applies requirements the way it does.

The British Columbia Building Code uses the terms “access” and “accessible” in place of “barrier-free”. The definitions of access and accessible reflect the meaning commonly attributed to “universal design”. The meaning of sensory disability, which was a defined term in previous editions of the British Columbia Building Code, has been incorporated into the definition of “persons with disabilities”. Note A-1.4.1.2.(1) discusses these changes.

As in previous editions, the definition of access is limited to areas and facilities that the British Columbia Building Code requires to be accessible. A space that is not required by the Code to be accessible, but that happens to have a feature that is accessible, does not trigger application of the Code such that the whole of the space must be designed to be accessible. That said, consideration should be given to areas and facilities that people with disabilities may approach and enter so that they are not inhibited from making their way safely and independently away from the area or facility when or if it becomes unusable.

Section 3.8. Accessibility

(See Note A-3.8.)

A-3.8. Accessible Design Assumptions. This Section contains minimum provisions to accommodate persons with disabilities.

Building Access Handbook

An illustrated guide and commentary has been produced to assist users of Section 3.8. and other access requirements of the British Columbia Building Code. This handbook contains the entire text of Section 3.8. and other access requirements, and is supplemented by commentary and illustrations on specific requirements.

3.8.1. Scope

3.8.1.1. Scope

1) This Section is concerned with the design and construction of *buildings* and *occupancies* to make them *accessible*.

Intent: To state the scope of Section 3.8.

2) *Buildings* and facilities required to be *accessible* in accordance with Subsection 3.8.2. shall be designed in accordance with Subsection 3.8.3.

3) *Alterations* and additions to existing *buildings* shall conform to Subsection 3.8.4.

4) *Adaptable dwelling units* shall be designed and constructed in accordance with Subsection 3.8.5.

Intent: To direct Code users to Subsections 3.8.2. and 3.8.3.

Section 3.8. is organized into the following Subsections:

Subsection 3.8.1. provides the scope of the British Columbia Building Code's accessibility requirements.

Subsection 3.8.2. establishes the application of accessible design requirements to spaces and facilities.

Subsection 3.8.3. establishes the design requirements of a space or facility if it is to be considered accessible.

Subsection 3.8.4. determines the minimum accessibility requirements during alterations or additions to existing buildings.

Subsection 3.8.5. contains the requirements for adaptable dwelling units (units designed so accessibility features can be added more easily and inexpensively after construction).

3.8.2. Application

Subsection 3.8.2. outlines how accessibility provisions must be applied. It tells the designer what buildings or parts of buildings, and what types of facilities must be accessible to people with disabilities.

3.8.2.1. General

(See Note A-3.8.2.1.)

A-3.8.2.1. Accessibility. Industrial buildings often pose a greater risk to their occupants due to the presence of significant quantities of dangerous materials or the use of hazardous processes. For example, plants which are classified as Group F, Division 2 or 3, may store and use toxic or highly flammable substances in significant quantities, or house processes which involve very high temperatures and which have a high degree of automation. In some facilities, particularly in primary industries such as forestry and metallurgy, the construction normally used and the operations carried out within the space can make compliance with the requirements of Section 3.8. impracticable. It is therefore intended that these requirements be applied with discretion in buildings of Group F, Division 2 or 3 major occupancy. However, where industrial buildings contain subsidiary occupancies, such as offices or showrooms, it is reasonable to require that accessibility be provided in these spaces.

Intent: To state the application of Section 3.8.

1) Except as provided in Clause 3.8.2.3.(2)(j), the requirements of this Section apply to all *buildings* and all areas of *buildings* where work functions can reasonably be expected to be performed by *persons with disabilities* except

a) *dwelling units*, row houses, boarding houses, lodging houses and construction camps, except as required by
   i) Article 3.8.2.12., or
   ii) Subsection 3.8.5.,

b) apartment and condominium *buildings* except that an *accessible* path of travel conforming to Subsection 3.8.3. from *accessible* entrances as described in Article 3.8.2.2. throughout common areas and, if provided, to parking areas and passenger loading zones as described in Article 3.8.2.5. is required unless the *building* is not equipped with a passenger-elevating device, in which case an *accessible* path of travel as described in Article 3.8.2.3.
   i) need only be provided on levels with *accessible* entrances, and
   ii) need not be provided where the difference in floor elevation between the entrance level or levels and every *dwelling unit* exceeds 600 mm,

c) *high-hazard industrial occupancies,*

d) *buildings* that are not intended to be occupied on a daily or full-time basis, including but not limited to automatic telephone exchanges, pump houses and substations,

e) public toilet *buildings* in locations such as highway rest areas, campgrounds, picnic grounds, parks and recreational vehicle parks where an *accessible* path of travel conforming to Subsection 3.8.3. is provided from a roadway or *street* to at least one other *accessible* public toilet *building*,

f) the *storey* next above or below the *accessible storey* in a *suite* of not more than two *storeys* where the *accessible storey* is the *first storey* or *basement*, provided the *storey* next above or below the *accessible storey*
   i) is less than 600 m² in *floor area*,
   ii) contains only facilities that are also contained on the *accessible storey*,
   iii) does not contain an *assembly major occupancy* with an area more than 100 m², and
   iv) is not served by a passenger-elevating device connecting the *storey* next above or below the *accessible storeys* (see Note A-3.8.2.1.(1)(f) and (g)), and

g) the *storey* next above or below the *accessible storey* in a *building* with not more than one *storey* above the *first storey*, provided the *storey* next above or below the *accessible storey*
   i) is less than 600 m² in *floor area*,
   ii) contains only facilities that are also contained on the *accessible storey*,
   iii) does not contain an *assembly major occupancy* with an area more than 100 m², and
   iv) is not served by a passenger-elevating device connecting the *storey* next above or below the *accessible storeys* (see Note A-3.8.2.1.(1)(f) and (g)).

A-3.8.2.1.(1)(f) and (g) Access to Small Storeys. Elevators and elevating devices can be expensive and in small buildings may form a significant percentage of a building's cost. This Clause is intended to exempt such small second storeys or basements from access requirements when they are self-contained or contain the same facilities as on the accessible storey. An example where access is not required is the second storey of a restaurant which contains only additional seating. If, on the other hand, the restaurant's washrooms are in the less than 600 m² basement there must be access to them as they are an integral part of the principle function and occupancy on the accessible storey. Likewise, staff lunchrooms and washrooms are integral with the principle function and when they are on a small second storey or mezzanine they must be accessible when a person with disabilities could reasonably be expected to be employed there.

This exemption applies to buildings with not more than one storey above the first storey. A building with two or more storeys above the first storey must be fully accessible. Mezzanines that are not considered as storeys for the purposes of determining building height are considered storeys for the purposes of applying Clauses 3.8.2.1.(1)(f) and (g).

People with disabilities must have access to all the services and facilities offered. A non-accessible level may not contain facilities or services unavailable elsewhere on the storey or in the suite. For example, if pool tables are provided in a bowling alley, they must be accessible along with the bowling and refreshment services.

Areas where work functions can be performed by people with disabilities are required to be accessible.

Mezzanines are storeys for the purposes of applying requirements for accessibility. A mezzanine that is not considered a storey when determining building height is not relevant when determining a building's accessibility. Similarly, basements are also considered storeys. However, there are limited exemptions from providing access to basements.

Figure 3.8.2.1.(1)(f) and (g) shows what storeys must be accessible and when certain exemptions are permitted such as for adjacent floor levels including mezzanines and basements.

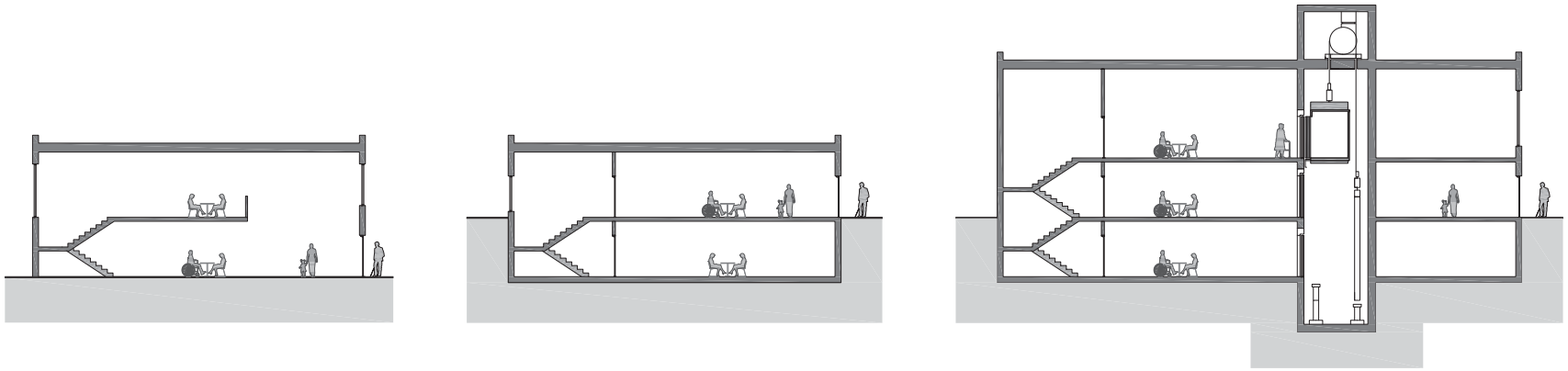

Figure 3.8.2.1.(1)(f) and (g)
Access to storeys

If the entrance storey is accessible and the adjacent storey is not required to be accessible, a washroom in the accessible storey must meet the requirements of Section 3.8. and serve all occupants. Sentence 3.7.2.2.(4) permits a single water closet to serve all occupants if the total occupant load is low.

2) *Buildings* and parts of *buildings* required by Sentence (1) and this Subsection to be *accessible* shall comply with Subsection 3.8.3. including, without limitation, exterior paths and stairs within property lines from roadways, *streets*, parking areas, exterior passenger-loading zones, and ancillary areas to all *accessible* entrances of these *buildings*.

3) The requirements of this Section take precedence over other requirements contained in this Part and in Part 9.

4) Where an *accessible* path of travel connects to a path of travel on the adjacent side of a *firewall* through a doorway, the requirements of this Section shall apply to the *floor areas* on both sides of the *firewall* as if they were in the same *building*.

5) *Access* shall be provided to *alterations*, additions and changes in *occupancy* to the extent required in Subsection 3.8.4.

The 2018 edition of the British Columbia Building Code does not provide an exemption for Group E shops and stores with a total retail floor space of less than 50 m² from the requirement to provide access. All Group E shops and stores are required to provide access to the extent required by Article 3.8.2.1.

Not all public toilet buildings are required to be accessible. Clause 3.8.2.1.(1)(e) exempts some public toilet buildings from providing access if there are other accessible public toilet buildings available. If a building is not accessible, signage should be provided to direct the user to the buildings that are accessible.

3.8.2.2. Entrances

(See Note A-3.8.2.2.)

A-3.8.2.2. Entrances. An accessible route should exist from the sidewalk or roadway and parking area to an accessible building entrance. This route should be located so that people do not have to pass through dedicated smoking areas or behind parked cars. Accessible routes should coordinate with the routes to other buildings and to public transportation stops.

To provide more general access to buildings, not less than 50% of the pedestrian entrances are required to be accessible. This should include a principal entrance. If the 50% calculation results in a fraction, the number of accessible entrances should be the next higher unit value. For the purpose of determining the number of entrances to a building, several adjacent doors in a bank of doors are considered to be a single entrance.

If an intercom system is provided, the system shall comply with the requirements for controls and should be useable by persons who communicate using visual language such as a video system.

1) In addition to the *accessible* entrances required by Sentence (2), not less than 50% of all pedestrian entrances, which shall include the principal entrance, of a *building* referred to in Sentence 3.8.2.1.(1) shall be *accessible* and shall lead from

a) the outdoors at sidewalk, roadway or *street* level, or

b) a*n accessible* path of travel that complies with Subsection 3.8.3. and leads from a sidewalk, roadway or *street*.

Attributions [F73-OA1]

Intent: To limit the probability that people using a manual wheelchair or other manual mobility assistance device will not be able to readily and conveniently enter a building.

Intent: To state that the requirements of Subsection 3.8.3. also apply to exterior ramps referred to in Clause 3.8.2.2.(1)(b).

2) A *suite* of *assembly occupancy*, *business and personal services occupancy* or *mercantile occupancy* that is located in the *first storey* of a *building*, or in a *storey* to which an *accessible* path of travel is provided, and that is completely separated from the remainder of the *building* so

Attributions [F73-OA1]

Intent: To limit the probability that people using a manual wheelchair or other manual mobility assistance device will not be able to enter a suite without the assistance of another person.

that there is no access to the remainder of the *building*, shall have at least one *accessible* entrance.

3) An *accessible* entrance required by Sentence (1) or (2) shall be designed in accordance with Subsection 3.8.3.

Intent: To state that Subsection 3.8.3. also applies to accessible pedestrian entrances required by Sentences 3.8.2.2.(1) or 3.8.2.2.(2).

4) At an *accessible* entrance that includes more than one doorway, only one of the doorways is required to be designed in accordance with Subsection 3.8.3.

Intent: To limit the application of Subsection 3.8.3. to only one doorway per entrance, located in an accessible path of travel, under certain conditions.

5) If a *walkway* or pedestrian bridge connects two *accessible storeys* in different *buildings*, the path of travel from one *storey* to the other *storey* by means of the *walkway* or bridge shall be *accessible*.

Attributions [F73-OA1]

Intent: To limit the probability that people using a manual wheelchair or other manual mobility assistance device will not be able to cross from an accessible storey in one building to an accessible storey in a connected building by the same means that is provided for other people.

6) Where provided, an intercom system shall be installed at the principal entrance to an apartment or condominium *building* conforming to Sentence (1).

Attributions [F74-OA2]

Fifty percent of pedestrian entrances are required to be accessible. The principal entrance must be accessible and counts towards the fifty percent requirement. Where an entrance may have multiple doors, only one of the doors must be accessible for the entrance to be counted as one of the accessible entrances.

People with disabilities can arrive at a building by several means, including driving a vehicle and parking, being a passenger in a vehicle who is dropped off, taking public transportation, using a mobility device and by walking. Ideally, all the building entrances, especially those that coordinate various arrivals, should be accessible.

Signage indicating the accessible entrances should be located early in the path of travel so that people looking for an accessible entrance do not inadvertently arrive at an entrance only to then realize it is not accessible.

3.8.2.3. Areas Requiring Access

(See Note A-3.8.2.3.)

A-3.8.2.3. Access to Rooms and Facilities. If access is required into suites or rooms in Subsection 3.8.2., it is intended that access be provided, with some exceptions identified in Sentence 3.8.2.3.(2), throughout each room or suite including access to all facilities and areas. Some examples of where access is required are as follows:

- within each suite (subject to Clauses 3.8.2.3.(2)(h) to (j)),
- within rooms or areas that serve the public or are designated for use by visitors, including interview rooms, holding rooms, changing rooms, areas in assembly occupancies with fixed seats so as to provide viewing of any entertainment areas, display areas and merchandising departments,
- within each type of membership facility,
- within rooms or areas for student use in assembly occupancies,
- within general work areas, including office areas and areas with lockers,
- within general use or general service areas, including shared laundry areas in residential occupancies, recreational areas, cafeterias, lounge rooms, lunch rooms and infirmaries,
- within sleeping rooms in hospitals and nursing homes with treatment,
- (if installed), into at least one passenger elevator or elevating device conforming to Articles 3.5.2.1. and 3.8.3.7.,
- into washrooms described in Sentences 3.8.2.8.(1) to (3),
- to any facility required by this Section to be designed to accommodate persons with physical disabilities,
- onto every balcony provided in conformance with Clause 3.3.1.7.(1)(c),
- to service counters used by the general public (examples include sales counters, refreshment stands, drinking fountains, cafeteria counters, checkout counters and bank service counters), and
- to equipment designed to serve the public including self-serve kiosks, automated banking machines and night deposit boxes.

Where one or more hairdressing sinks are provided in barber shops, hairdressing shops and beauty parlors, at least one shall be useable by persons using wheelchairs. Where fitting rooms are provided in a store, an accessible fitting room is required. An enclosure not less than 1 500 mm by 1 500 mm is suggested.

In an accessible fitting room, coat hooks should be mounted not more than 1200 mm above the floor on a side wall and not projecting more than 50 mm from the wall. The door should swing outward, unless there is a clear floor space within the fitting room of at least 800 mm by 1350 mm plus the arc of the door swing. A fold-down seat or loose chair without arms should be provided but should not diminish the space necessary for maneuvering within the fitting room.

The permission to waive an accessible path of travel for wheelchair access to certain specified areas of a building is not intended to waive accessibility requirements for persons whose physical disabilities do not require special provision for access to raised or sunken levels. Persons with vision impairments or who are deaf or hard of hearing that do not require the use of a wheelchair can be expected to move throughout a building.

The concept of providing similar amenities and facilities applies, among other things, to food, beverage, and entertainment facilities within restaurants, to smoking and non-smoking areas permitted in accordance with local regulations, and to window areas providing a view of an exterior attraction.

Availability of specific spaces depends on reservation policy and the sequence in which patrons arrive at a restaurant or other facility, and therefore is beyond the scope of this Code.

Accessibility "within" a floor area means that in general all normally occupied spaces and levels are to be accessible, except those areas which are deemed not to require access. Examples of normally occupied floor areas include lobbies and passageways where persons are intended to use or pass through, but do not include spaces that are not normally used by the occupants such as storage platforms in industrial and other occupancies.

Further, an accessible path of travel should be provided where buildings are networked together and as a connection to public transportation stops.

1) Except as permitted by Sentence (2), *access* from the *accessible* entrances required by Sentences 3.8.2.2.(1) and (2) shall be provided throughout the entrance *storey* or *storeys* and within all other normally occupied *floor areas* as required by Sentence 3.8.2.1.(1).

Attributions [F73-OA1]

Intent: To limit the probability that people using a manual wheelchair or other manual mobility assistance device will not be able to move about within a building, or use facilities located within a building, without the assistance of another person.

Access covers a range of abilities and disabilities. Access throughout means that there is access to all required facilities and parts of the building. This may be achieved by an additional route, such as a ramp for people using wheelchairs in addition to a flight of stairs. The stairs must be accessible for pedestrians and provide the required widths, tactile walking surface indicators and illumination.

Access requirements are intended to connect parts of a building and its facilities with the range of abilities and disabilities of the occupants to allow for their full use and participation.

Figure 3.8.2.3.(1)-A illustrates accessible paths of travel providing access throughout common areas.

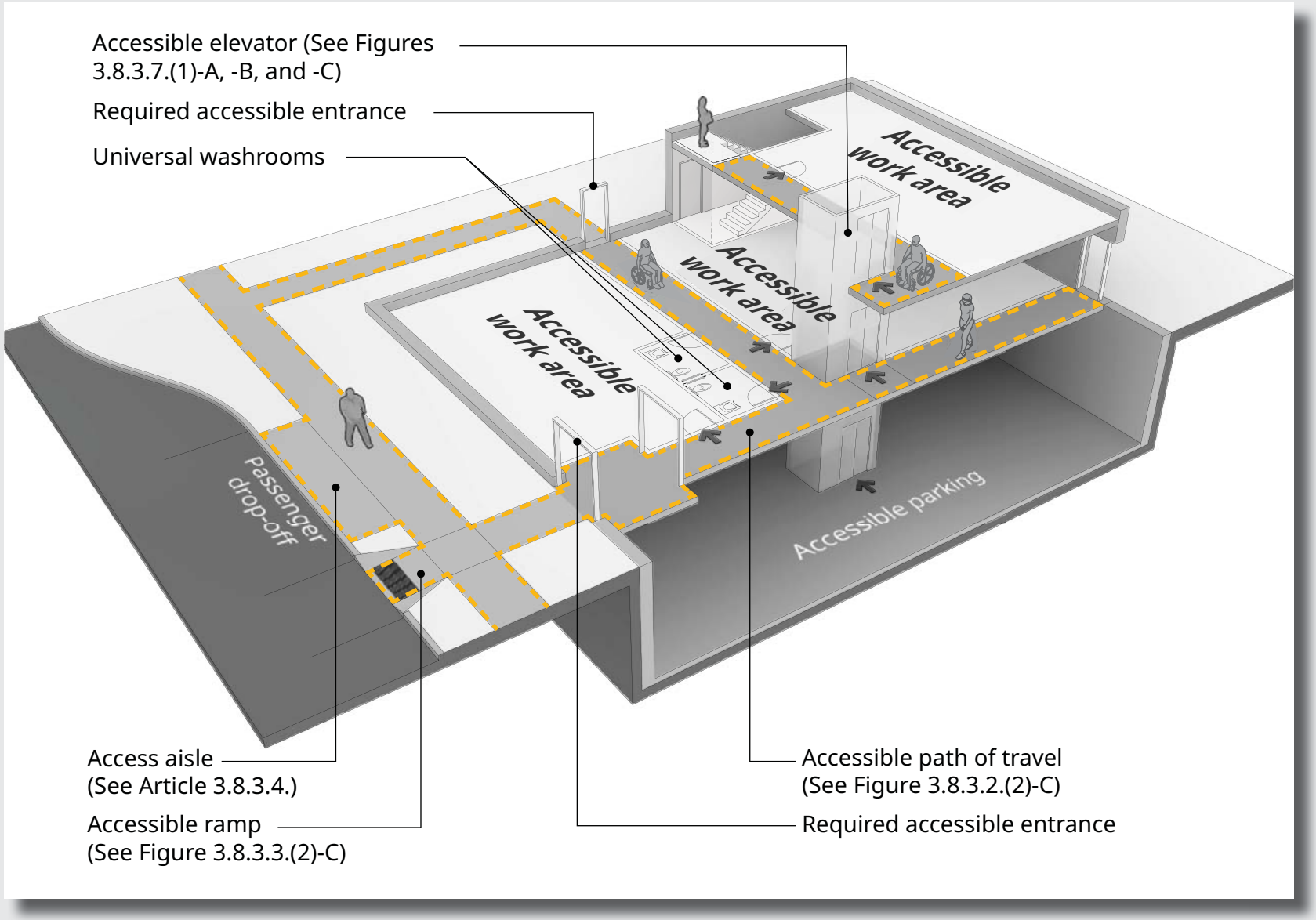

Figure 3.8.2.3.(1)-A
Access throughout

Figure 3.8.2.3.(1)-B illustrates some of the methods that may be used to provide access to and between floors. A ramp is not shown because ramps are generally not a practical method for providing access from storey to storey.

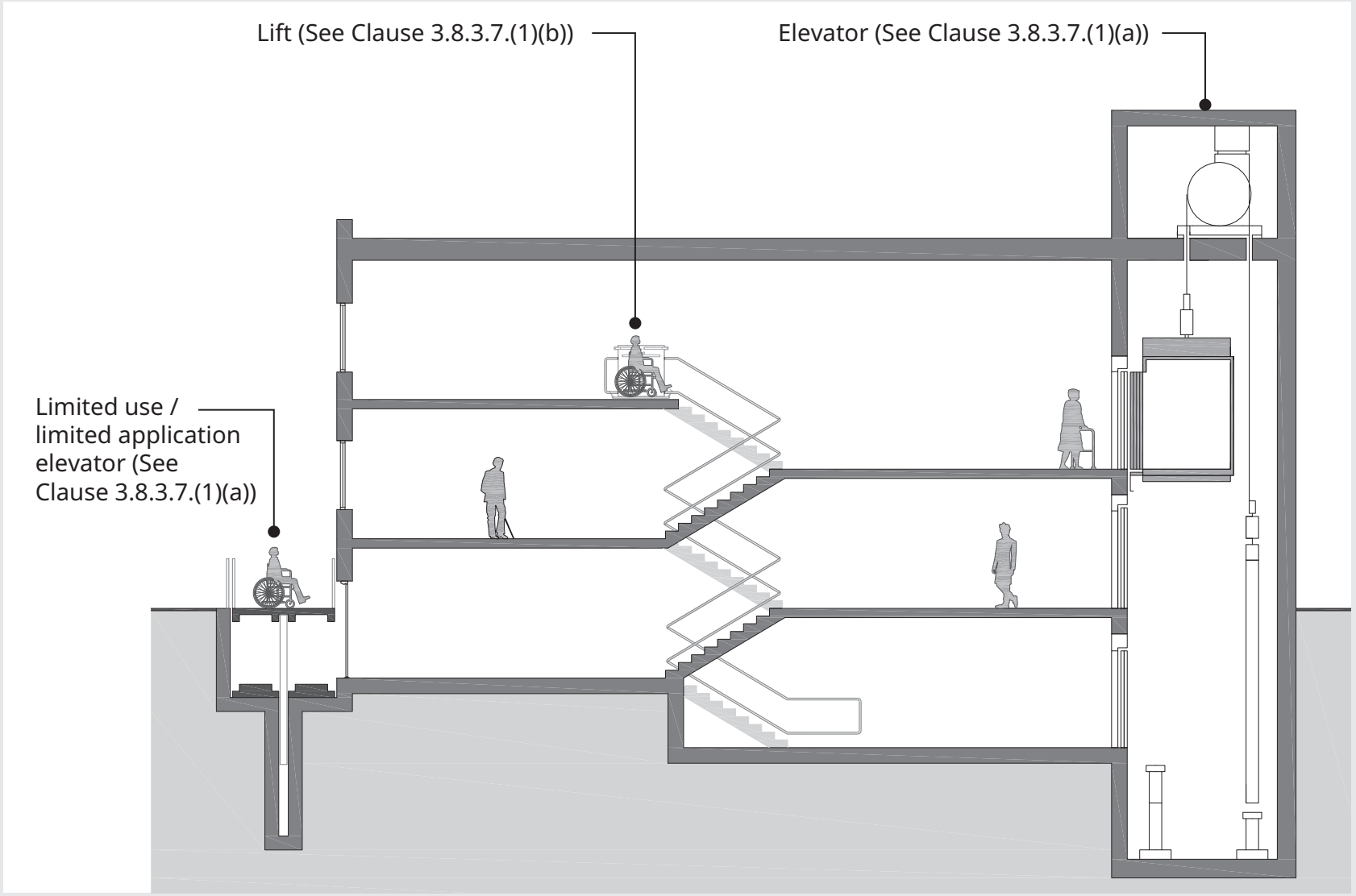

Figure 3.8.2.3.(1)-B
Access between floor levels

2) Except as required by Sentence (3), *access* is not required

a) to *service rooms*,
b) to elevator machine rooms,
c) to janitor's rooms,
d) to *service spaces*,
e) to crawl spaces,
f) to *attic or roof spaces*,
g) reserved,
h) reserved,
i) within portions of a *floor area* with fixed seats in an *assembly occupancy* where those portions are not part of the *accessible* path of travel to spaces designated for wheelchair use,
j) within floor levels of a *suite* of *residential occupancy* that are not at the same level as the entry level to the *suite*,
k) reserved, or
l) within those parts of a *floor area* that are not at the same level as the entry level, provided facilities and uses provided on any raised or sunken level are also *accessible* on the entry level.

Intent: To exempt certain areas of buildings from the requirements of Sentence 3.8.2.3.(1), which would otherwise require an accessible path of travel, on the basis that it is impractical and onerous to provide access to and from these areas.

3) In an *assembly occupancy*, the number of spaces designated for wheelchair use within rooms or areas with fixed seats shall conform to Table 3.8.2.3. (See also Article 3.8.3.21. for additional requirements.)

Attributions [F74-OA2]

Intent: To limit the probability of an insufficient number of spaces for manual wheelchairs, which could lead to people who use manual wheelchairs being excluded from certain rooms and areas.

Table 3.8.2.3.
Designated Wheelchair Spaces
Forming Part of Sentence 3.8.2.3.(3)

Number of Fixed Seats in Seating Area	Number of Spaces Required for Wheelchairs
50 and under	2
51 – 150	4
151 – 300	5
301 – 500	6
501 – 5 000	6, plus one additional space for each increment of up to 150 in excess of 501 fixed seats
5 001 and over	36, plus one additional space for each increment of up to 200 in excess of 5 001 fixed seats

The 2018 edition of the British Columbia Building Code has increased the ratio for required accessible viewing spaces.

3.8.2.4. Path of Travel to Storeys Served by Escalators and Moving Walks

1) In a *building* in which an escalator or inclined moving walk provides access to any floor level above or below the entrance floor level, an interior *accessible* path of travel shall also be provided to those floor levels. (See Note A-3.8.2.4.(1).)

Attributions [F73-OA1]

Intent: To limit the probability that people using a manual wheelchair or other manual mobility assistance device will not be able to move about within a building without the assistance of another person.

A-3.8.2.4.(1) Path of Travel to Storeys Served by Escalators and Moving Walks. In some buildings, escalators and inclined moving walks are installed to provide transportation from one floor level to another floor level so as to increase the capacity to move large numbers of persons. Some buildings located on a sloping site are accessible from street level on more than one storey and an escalator or inclined moving walk is provided for internal movement from floor to floor. In both these situations, a person with a physical disability must be provided with an equally convenient means of moving between the same floor levels within the building. This can be accomplished by providing elevators or a platform-equipped passenger-elevating device.

2) The route from the escalator or inclined moving walk to the *accessible* path of travel that leads from floor to floor as required by Sentence (1) shall be clearly indicated by appropriate signs. (See also Article 3.8.2.10.)

Attributions [F73-OA1]

Intent: To limit the probability that people using a manual wheelchair or other manual mobility assistance device will not be able to find the way to an accessible path of travel in the building.

3.8.2.5. Path of Travel to Parking Areas and Passenger-Loading Zones

(See Note A-3.8.2.5.)

A-3.8.2.5. Parking Areas. In localities where local regulations or bylaws do not govern the provision of or dimensions of accessible parking spaces, the following provides guidance to determine appropriate provisions. If more than 50 parking spaces are provided, parking spaces for use by persons with physical disabilities should be provided in the ratio of one for every 100 parking spaces or part thereof. Where parking spaces are provided, parking spaces for use by persons with physical disabilities should also be provided for each accessible viewing position and for each accessible sleeping room or bed space. Parking spaces for use by persons with physical disabilities should

(1) be not less than 2 400 mm wide and provided on one side with an access aisle not less than 1 500 mm wide,

(2) have a firm, slip-resistant and level surface,

(3) be located close to an entrance required to conform to Article 3.8.2.2.,

(4) be clearly marked as being for the use of persons with physical disabilities, and

(5) be identified by a sign located not less than 1 500 mm above ground level, with the International Symbol of Access (Figure A-3.8.2.5.-A).

Figure A-3.8.2.5.-A
"International Symbol of Access" sign

A general guide for the slip resistance of materials is provided in the Appendix of this handbook.

Asphalt, concrete and firm, compacted gravel are acceptable parking surfaces. Curb ramps should be not less than 1 500 mm wide. Parallel parking spaces should be not less than 7 000 mm long. If more than one parking space is provided for persons with physical disabilities, a single access aisle can serve two adjacent parking spaces. The arrangement shown in Figure A-3.8.2.5.-B allows the shared use of an access aisle to serve two adjacent parking spaces provided for use by persons with physical disabilities. Parking to accommodate vans and other vehicles equipped with platform lifts or side ramps should be provided greater dedicated space. The design of the path of travel should accommodate loading to and from lifts and ramps, where intended. Vertical clearance must also be considered.

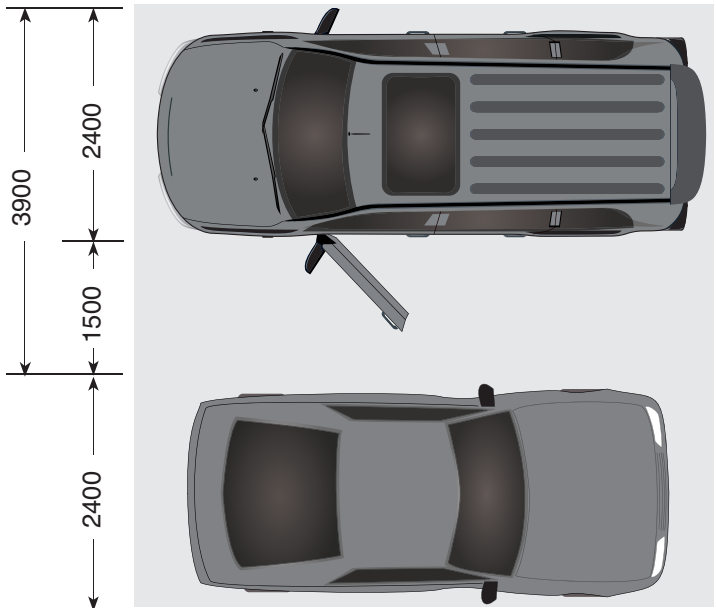

Figure A-3.8.2.5.-B
Shared access aisle

The access aisle may serve more than one parking stall and should have the same level surface as the parking stalls it serves. Consider the movement around doors and ramps so that there is enough space and it is not necessary to travel behind other cars or be in a position where it is difficult to be seen by other drivers. Figure 3.8.2.5. shows a shared aisle serving two stalls. The CSA B651, Accessible Design for the Built Environment standard is another source of information for accessible parking stall quantities and design.

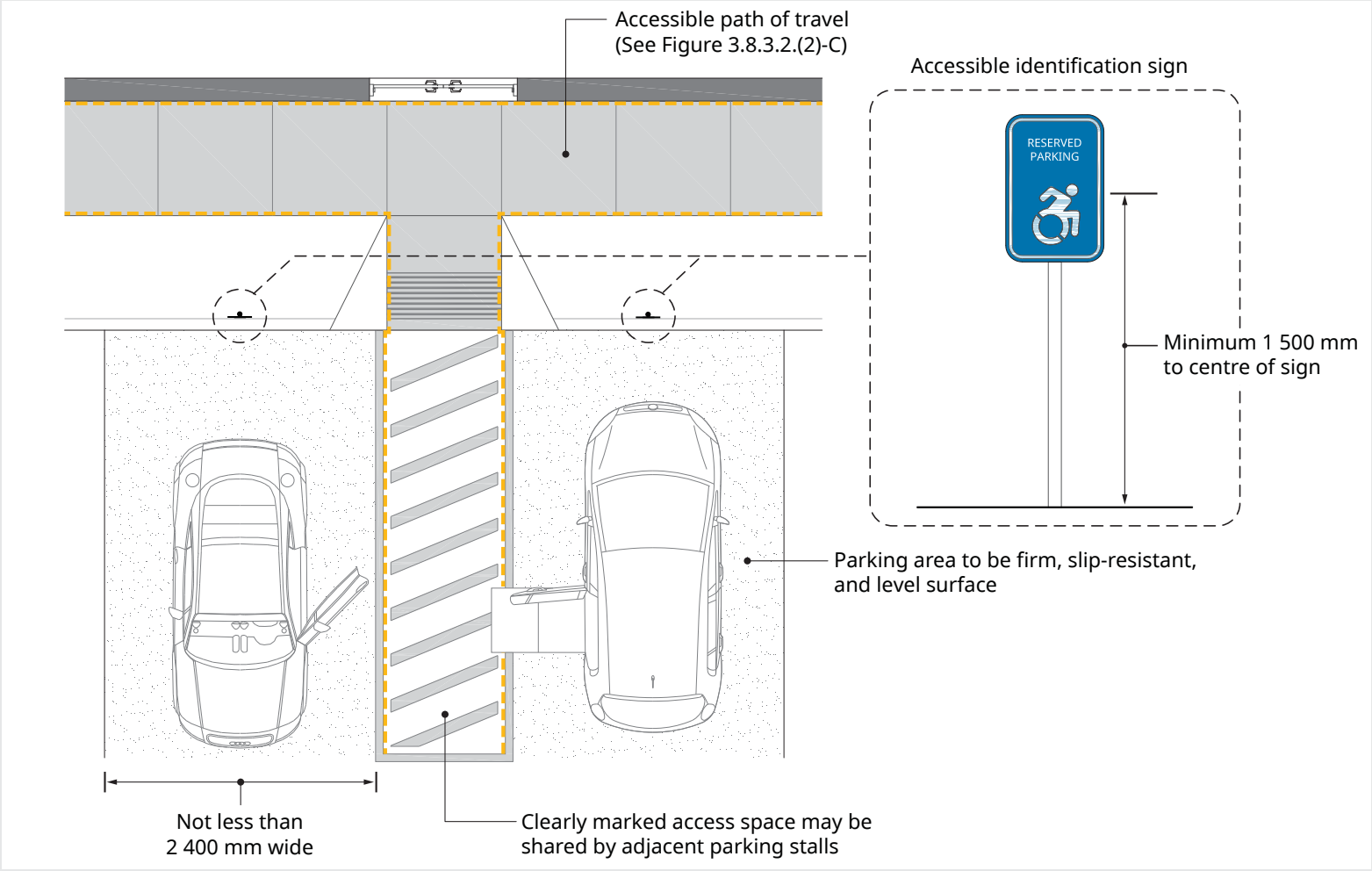

Figure 3.8.2.5.
Parking stall access aisles

1) An *accessible* path of travel shall be provided between parking stalls for *persons with disabilities* and an *accessible* entrance referred to in Article 3.8.2.2. (See Note A-3.8.2.5.(1).)

A-3.8.2.5.(1) Path of Travel to Parking. It is not intended that a separate accessible entrance must be provided from the parking area. The designer may choose to designate the entrance leading to the parking area as the required entrance or to provide a properly identified and unobstructed path of travel from the parking area to the entrance which is accessible. The entrance chosen should, in any case, be the closest entrance to the parking area and one normally used by the occupants of the building. Long paths of travel are not recommended.

Attributions [F73-OA1]

Intent: To limit the probability that people using a manual wheelchair or other manual mobility assistance device will not be able to travel between exterior parking spaces and a building entrance without the assistance of another person.

2) Where a passenger-elevating device serves one or more indoor parking levels, an *accessible* path of travel shall be provided between each parking level containing stalls for *persons with disabilities* and all other parts of the *building* required to be *accessible* in accordance with Subsection 3.8.3.

Attributions [F73-OA1]

Intent: To limit the probability that people using a manual wheelchair or other manual mobility assistance device will not be able to travel between indoor parking spaces and a building entrance without the assistance of another person.

3) Passenger-loading zones shall comply with Subsection 3.8.3. and be provided with an *accessible* path of travel to an *accessible* entrance referred to in Article 3.8.2.2.

Attributions [F73-OA1]

Intent: To state the application of Subsection 3.8.3. regarding exterior passenger-loading zones.

Where there are several buildings with parking areas or passenger-loading zones, parking stalls and loading zones should be designed and located to accommodate access to all buildings by people with disabilities and close to an accessible entrance.

The design should leave adequate space for side- and rear-loading vehicles.

It is recommended that the number of parking stalls be calculated to suit specific needs. Some buildings such as medical clinics may need more accessible parking stalls than other buildings.

3.8.2.6. Controls and Outlets

1) Except as provided in Sentence 3.5.2.1.(3), controls for the operation of *building* services or safety devices, including electrical switches, thermostats, faucets, door and window hardware and intercom switches, that are intended to be operated by the occupant and are located in an *accessible floor area* shall comply with Subsection 3.8.3. (See Note A-3.8.2.6.(1).)

Attributions [F74-OA2]

Intent: To state the application of Subsection 3.8.3. regarding controls.

Intent: To direct Code users to Sentence 3.5.2.1.(3) for the requirement regarding controls in passenger elevators.

A-3.8.2.6.(1) Application to Security Access Systems. Sentence 3.8.2.6.(1) is not intended to reduce the functionality of security devices that limit access to secure areas and are addressed by other Sections of the British Columbia Building Code.

2) Electrical outlets that are intended for occupant use and are located in an *accessible floor area* shall be located in conformance with Subsection 3.8.3. (See Note A-3.8.2.6.(2).)

Attributions [F74-OA2]

A-3.8.2.6.(2) Electrical Outlets. Electrical outlets intended for occupant use shall be located so that their height above the finished floor is not a barrier to use. Outlets that are dedicated for specific equipment or functions and not intended to be readily available to occupants need not conform to the location requirements.

Not all controls or electrical outlets are intended to be available to all occupants. However, where it is intended that occupants be able to operate controls or that electrical outlets be available to occupants, they are to be approachable and located at an appropriate height above the finished floor.

3.8.2.7. Power Door Operators

1) Except as provided in Sentences (2) and (3), every door that provides an *accessible* path of travel through an entrance referred to in Article 3.8.2.2., including the interior doors of a vestibule where provided, shall be equipped with a power door operator that complies with Subsection 3.8.3. and allows persons to activate the opening of the door in the intended direction of travel, where the entrance serves

a) a hotel,

b) a *building* of *treatment* major occupancy, or

c) a *building* of *assembly, care, business and personal service* or *mercantile* *major occupancy* more than 500 m^2 in *building area*.

Attributions [F73-OA1]

Intent: To limit the probability that people using a manual wheelchair or other manual mobility assistance device will not be able to open all doors at the entrance without the assistance of another person.

2) The requirements of Sentence (1) do not apply to an individual *suite* having an area less than 500 m^2 in a *building* having only *suites* of *assembly, care, business and personal services* or *mercantile occupancy* if the *suite* is completely separated from the remainder of the *building* so that there is no access to the remainder of the *building*.

Intent: To exempt certain suites from the requirements of Sentence 3.8.2.7.(1), which would otherwise require doors to be equipped with power door operators, on the basis that the suites are limited in size and have no access to the remainder of the building.

3) Only the active leaf in a multiple leaf door in an *accessible* path of travel need conform to the requirements of this Article.

Intent: To exempt inactive leaves in doorways with multiple leaves from the requirements of Sentence 3.8.2.7.(1), on the basis that inactive leaves are intended to be used infrequently.

3.8.2.8. Plumbing Facilities

1) Except as permitted by Sentences (2) and (12), and as required by Sentence (3), a washroom in a *storey* to which *access* is required in accordance with Article 3.8.2.3., shall be *accessible* to the extent required by this Article and in accordance with Subsection 3.8.3. (See Note A-3.8.2.8.(1) to (3).)

A washroom is considered accessible when one of every facility within the washroom is accessible.

Temporary and portable facilities need to be accessible.

Attributions [F74-OA2]

Intent: To limit the probability that people using a manual wheelchair or other manual mobility assistance device will not be able to access an accessible washroom without the assistance of another person.

Intent: To state the application of Subsection 3.8.3. regarding accessible washrooms.

Attributions [F72-OH2.1] [F71-OH2.3]

Intent: To limit the probability that people using a manual wheelchair or other manual mobility assistance device will not be able to access an accessible washroom without the assistance of another person, which could lead to people not being able to use:

- a water closet, which could lead to unsanitary conditions, which could lead to harm, and
- a lavatory, which could lead to an inability to maintain personal hygiene, which could lead to harm.

Intent: To state the application of Subsection 3.8.3. regarding accessible washrooms.

2) A washroom need not conform to the requirements of Sentence (1) provided

a) it is located within a *suite* of *residential occupancy* or a *suite* of *care occupancy*,

b) at least one other *accessible* washroom is provided on the same *floor area* within 45 m along an *accessible* path of travel, or

c) reserved, or

d) it is located in a *business and personal service* or *mercantile occupancy*, with multiple *suites*, where at least one *accessible* washroom complying with Subsection 3.8.3. is either

i) available to all *suites*, or

ii) provided in each *suite* not having *access* to a washroom described in Subclause (i).

(See Note A-3.8.2.8.(1) to (3).)

Intent: To exempt washrooms from the requirements of Sentence 3.8.2.8.(1) [and referenced in Articles 3.8.3.11. to 3.8.3.12.] to be accessible, if they are located:

- within a suite of care occupancy or within a suite of residential occupancy,
- on floor areas where other accessible washrooms are provided on the same floor area within 45 m, or
- in an individual suite used for a business and personal services occupancy or mercantile occupancy where a washroom in the suite is accessible or access is provided to an accessible washroom not within the suite.

In business and personal service (i.e., offices) and mercantile (i.e., retail stores) occupancies with multiple suites, even if each suite has a washroom, the washroom may not be required to be accessible. Suites without an accessible washroom may be served by an accessible washroom that is not contained in the suite, provided it is kept available. It must always be available when clients or staff are expected to occupy the suite. There may be a combination where some suites include their own accessible washroom and others do not. In this case, if an accessible washroom is shared by multiple suites without their own accessible washroom, it does not have to be shared with a suite that already has an accessible washroom.

Figure 3.8.2.8.(2) illustrates the options provided in Subclauses 3.8.2.8.(2)(d)(i) and (d)(ii).

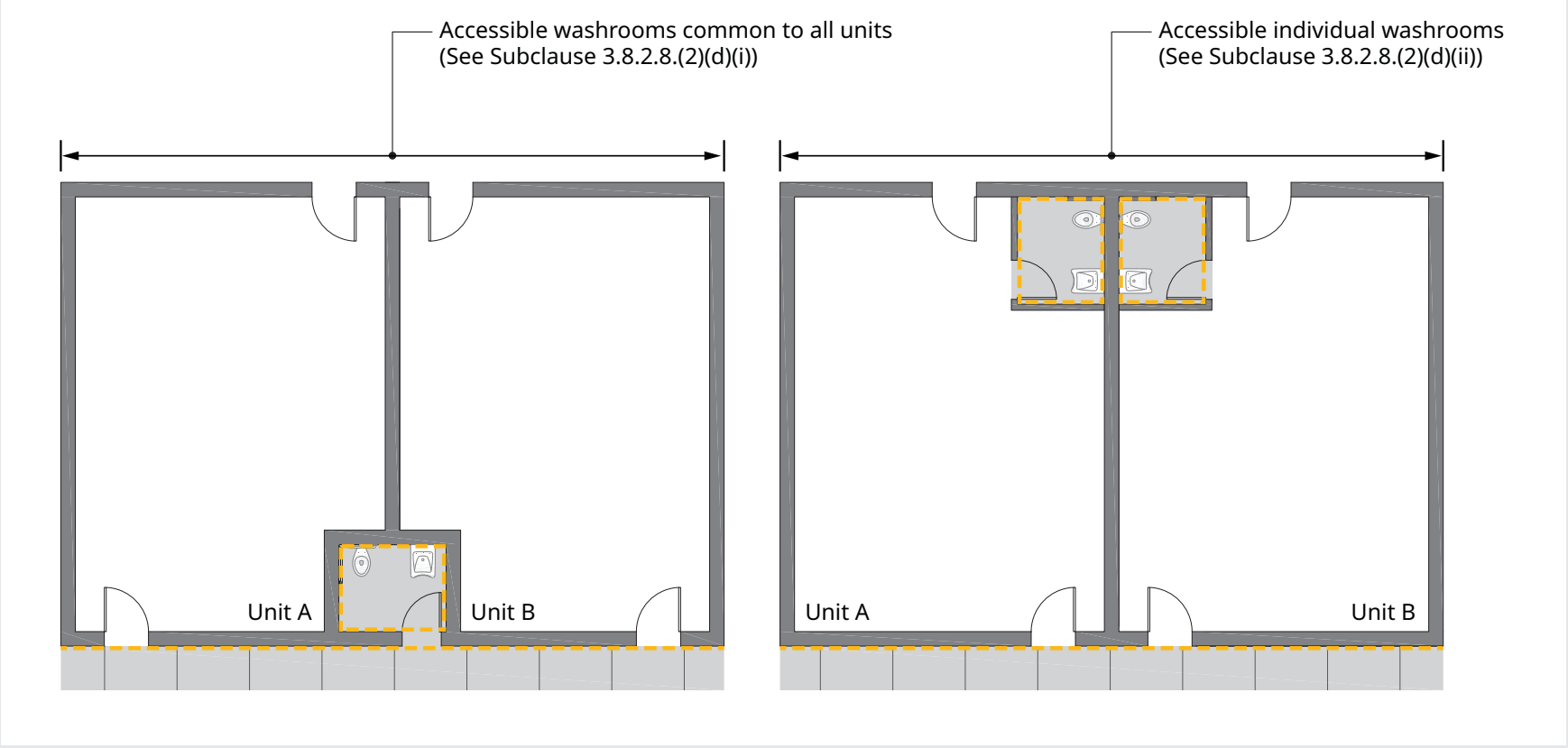

Figure 3.8.2.8.(2)
Washrooms in business and personal service and mercantile occupancies

3) In *buildings* and *occupancies* in which water closets are required in accordance with Subsection 3.7.2., at least one universal washroom complying with Subsection 3.8.3. shall be provided in the entrance *storey*, unless

a) an *accessible* path of travel is provided to a universal washroom complying with Subsection 3.8.3. elsewhere in the *building*, or

b) the water closets required by Subsection 3.7.2. are for *dwelling units* only. (See Note A-3.8.2.8.(1) to (3).)

Attributions [F72-OH2.1]

Intent: To limit the probability that people using a manual wheelchair or other manual mobility assistance device will not be able to access a water closet, which could lead to an inability to use a water closet, which could lead to unsanitary conditions, which could lead to harm.

Attributions [F73-OA1]

Intent: To limit the probability that people using a manual wheelchair or other manual mobility assistance device will not be able to access a water closet.

Attributions [F74-OA2]

A-3.8.2.8.(1) to (3) Washrooms. The primary intent of this requirement is that all regular washrooms be made accessible to all persons, including persons with disabilities, primarily persons who use a wheelchair. Well-designed washrooms which can accommodate persons with disabilities need not be much larger than conventional washrooms.

The exception in Clause 3.8.2.8.(2)(b) recognizes situations where several washrooms may be provided on a large floor area. In such a case, not all washrooms need to be accessible, provided that an accessible washroom is available within a reasonable distance (45 m) of one that is not and that the location of that accessible washroom is clearly indicated as required by Sentence 3.8.2.10.(2). However, where several washrooms are provided in an area together, the accessible washrooms should be included among them.

Clause 3.8.2.8.(2)(d) is intended to address "strip malls" (a shopping mall with no public corridor). Section 3.7., which requires plumbing facilities, does not address the concept of suite and could permit, for instance, a shopping mall containing only mercantile occupancies to have only one washroom for each sex located in any one of the suites. It is desirable, however, that washrooms be located so as to be accessible at all times, since the owner or tenant of one suite has no control over the activities of another. These buildings may have either public accessible washrooms in a central location or in each suite. This arrangement relieves any one tenant from having to provide "public" washrooms. Hence, the exception is meant as a relaxation to avoid an unnecessary burden on small facilities but should not be construed as meaning that these buildings need not provide accessible washrooms.

Sentence (3) requires an accessible universal washroom in every building required to have water closets. There are a significant number of persons with disabilities whose daily lives depend on assistance from their spouse or a care giver of the opposite sex. Providing this assistance in multiple stall public washrooms can be an added challenge. The universal washroom not only solves this problem but also serves the needs of other persons with disabilities who simply prefer the relative ease of using a universal washroom. It can also serve as a washroom for parents with small children and, with the addition of a counter, as a changing room for infants.

4) Reserved.

5) At least one water-closet stall or enclosure in a washroom required by Sentence (1) to be *accessible* shall comply with Subsection 3.8.3.

Attributions [F74-OA2]

Intent: To state the application of Subsection 3.8.3. regarding accessible washroom stalls.

6) Where urinals are provided in an *accessible* washroom, at least one urinal shall comply with Subsection 3.8.3.

Attributions F74-OA2]

Intent: To state the application of Subsection 3.8.3. regarding accessible urinals.

7) An *accessible* washroom shall be provided with at least one lavatory that complies with Subsection 3.8.3.

Attributions [F74-OA2]

Intent: To state the application of Subsection 3.8.3. regarding accessible lavatories.

8) Where mirrors are provided in an *accessible* washroom, at least one mirror shall comply with Subsection 3.8.3.

Attributions [F74-OA2]

Intent: To state the application of Subsection 3.8.3. regarding accessible mirrors.

9) Except as permitted in Sentence (12), in each location where drinking fountains are provided, at least one shall comply with Subsection 3.8.3. (See Note A-3.8.2.8.(9).)

Attributions [F74-OA2]

Intent: To state the application of Subsection 3.8.3. regarding accessible drinking fountains.

A-3.8.2.8.(9) Drinking Fountains. Similar to drinking fountains designed and located to be accessible, bottle filling stations should also be designed and located to be accessible. Drinking fountains and bottle filling stations should be indicated with appropriate signage.

10) Except within a *suite* of *care occupancy* or a *suite* of *residential occupancy*, where showers are provided in a *building*, at least one shower stall in each group of showers shall comply with Subsection 3.8.3.

Attributions F74-OA2]

Intent: To state the application of Subsection 3.8.3. regarding accessible showers.

11) Where a bathtub is installed in a *suite of residential occupancy* required to be *accessible*, it shall comply with Subsection 3.8.3.

Attributions [F74-OA2]

Intent: To state the application of Subsection 3.8.3. regarding accessible bathtubs.

12) In *occupancies* or parts of *occupancies* designed to be *accessible* and used predominantly by children, in patient areas in *treatment occupancies*, and in resident areas in *care occupancies*, it is permissible to design and locate plumbing fixtures and grab bars differently than described in Subsection 3.8.3. to accommodate the special needs of children, patients, residents and *care* providers.

3.8.2.9. Assistive Listening Devices

(See Note A-3.8.2.9.)

A-3.8.2.9. Assistive Listening Devices. Assistive listening devices may be used where audible communication is expected but may be obstructed, such as at screened ticket windows or service counters in noisy areas. Available assistive listening devices should be indicated with appropriate signage.

1) In a *building* of *assembly occupancy*, all classrooms, auditoria, meeting rooms and *theatres* with an area of more than 100 m^2 shall be equipped with an assistive listening system complying with Subsection 3.8.3.

Attributions [F74-OA2]

Intent: To state the application of Subsection 3.8.3. regarding assistive listening devices.

2) Courtrooms shall be equipped with an assistive listening system complying with Subsection 3.8.3.

Attributions [F74-OA2]

3.8.2.10. Signs and Indicators

1) Unless the degree of *access* provided is such as to make these signs unnecessary, signs complying with Subsection 3.8.3. shall be installed in an *accessible floor area* to indicate the location of

a) *accessible* entrances,
b) alternate *access* routes,
c) *accessible* spaces in seating areas,
d) *accessible* refreshment facilities,
e) *accessible* checkout lanes,
f) *accessible* public telephones,
g) *accessible* washrooms,
h) *accessible* showers,
i) *accessible* passenger-elevating devices,
j) *accessible* parking stalls,
k) *accessible* passenger-loading zones, and facilities for persons that are deaf or hard of hearing.

Attributions [F74-OA2]

Intent: To limit the probability that people using a manual wheelchair or other manual mobility assistance device will not be able to identify or locate an accessible entrance without the assistance of another person.

Intent: To limit the probability that people with a hearing disability will not be able to identify or locate equipment that responds to their needs without the assistance of another person.

Intent: To state the application of Subsection 3.8.3. regarding accessible signs.

Some routes and facilities are self-evident, and signage may be unnecessary or even cause confusion. In such instances, signage is not required.

If a building or part of a building is accessible, the need for signs may be significantly reduced. For example, if all washroom facilities are accessible, there would be no need to give direction to each one.

Doors and openings that lead from any public area and through which the public is permitted to pass in occupancies such as fine arts theatres, bowling alleys, court houses, restaurants, passenger terminals, hotels and motels and offices including dental and medical offices should be identified. It is recommended that sans-serif letters and Arabic numerals be equal to or greater than 25 mm high and raised between 0.7 mm and 3 mm with a stroke width-to-height ratio of 1:6 to 1:10 for ease of reading by touch. Location identifiers should be located at the side of doors and openings, centred 1350 mm above the finished floor and within 150 mm of the jamb.

Use discretion when identifying doors and openings to avoid unnecessary application. Identification should be located only at doors and openings to principal rooms and areas within a building, and not to smaller rooms contained within larger rooms and areas. Considering where a member of the public is free to travel in a building will assist in establishing these locations. For clarity, signs should have the minimum number of characters to convey their message. Figure 3.8.2.10.(1) provides an example of character proportions and location for room numbers.

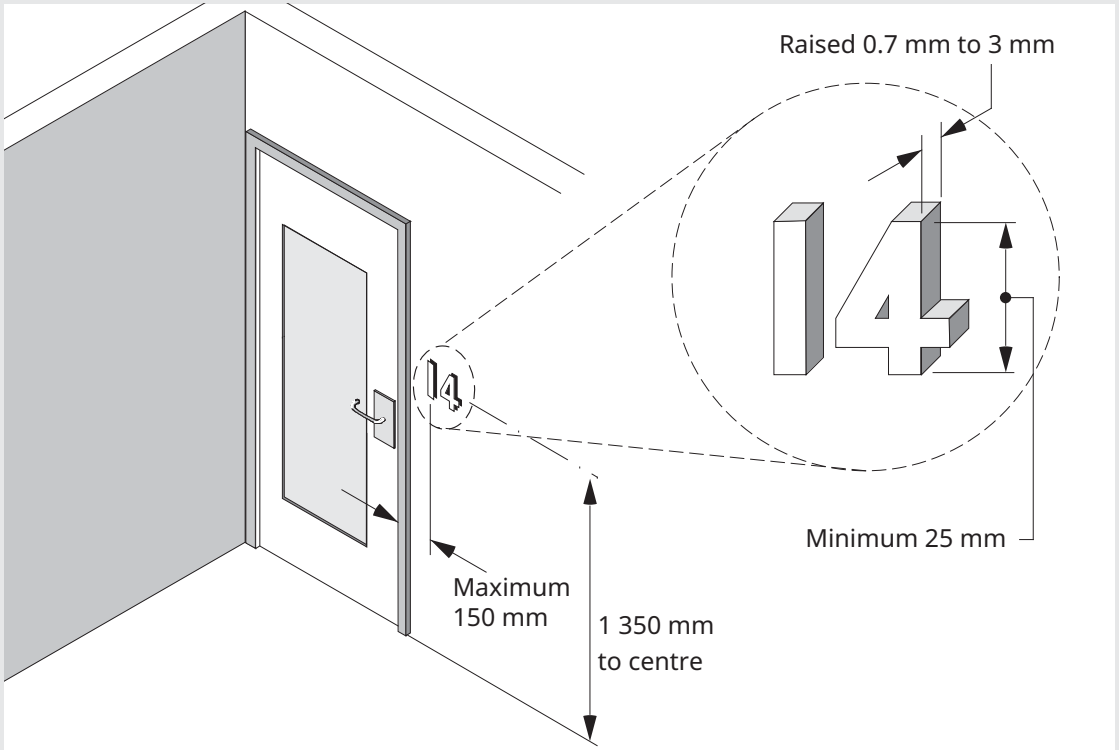

Figure 3.8.2.10.(1)
Room numbering

Numerical identification of floors ought to offer maximum contrast such as white-on-black or black-on-white.

2) Where a washroom is not designed to accommodate persons with physical disabilities in a *storey* to which an *accessible* path of travel is required, signs shall be provided to indicate the location of *accessible* washrooms.

Attributions [F74-OA2]

Intent: To limit the probability that people using a manual wheelchair or other manual mobility assistance device will not be able to identify or locate accessible washroom facilities without the assistance of another person.

3) Except as provided in Sentence (4) and Sentence 3.4.6.3.(4), tactile walking surface indicators complying with Subsection 3.8.3. shall be provided

a) at landings at the top of *flights* of stairs,

b) at an entry to a vehicular route or area where no curbs or any other element separate the vehicular route or area from a pedestrian route, and

c) along any edge of a platform that is not protected by a *guard*, and

i) higher than 250 mm above the adjacent surface, or

ii) above an adjacent slope having a gradient of more than 1 in 3.

Attributions [F30-OS3.1]

Attributions [F73-OA1]

4) Sentence (3) does not apply to *stages* or loading docks.

Tactile walking surface indicators are required for stairs that provide access but are only required at specific locations in the stairway. In an open stairway (exit stairways are normally enclosed) the tactile walking surface indicators are required at the top and at intermediate landings. Stairs intended primarily for emergency egress do not require tactile walking surface indicators.

3.8.2.11. Counters and Counters for Telephones

1) Every counter at which the public is served and intended as a work surface for extended business transactions shall comply with Subsection 3.8.3. (See Note A-3.8.2.11.(1).) (See also Note A-3.8.2.3.)

Attributions [F74-OA2]

Intent: To limit the probability that people using a manual wheelchair or other manual mobility assistance device will not be able to serve or be served at a service counter without the assistance of another person.

Intent: To state the application of Subsection 3.8.3. regarding accessible counter.

A-3.8.2.11.(1) Counters with Work Surfaces. It is not intended that all counters be accessible, but that sufficient accessible counter space be available. Examples of counters that should be accessible for the purposes of extended business transactions include teller counters in financial institutions and reception areas as well as any counter at which processing and signing of documents takes place. The provision is not intended to apply to the simple exchange of money for goods or services such as at a retail check-out counter or check-in counters where tickets are presented, or to work surfaces in industrial occupancies.

2) Built-in shelves and counters provided for public telephones shall comply with Subsection 3.8.3.

Attributions [F74-OA2]

Intent: To limit the probability that people using a manual wheelchair or other manual mobility assistance device will not be able to make use of a telephone and telephone counter without the assistance of another person.

Intent: To state the application of Subsection 3.8.3. regarding accessible counters and built-in shelves for telephones.

3.8.2.12. Sleeping Rooms and Bed Spaces

1) Sentences (2) and (3) apply to sleeping rooms and bed spaces provided in

a) residential clubs,
b) residential schools and colleges,
c) dormitories, and
d) hotels and motels.

2) When sleeping rooms or bed spaces are provided, at least one for every 40 or part thereof shall conform to Subsection 3.8.3.

Attributions [F73-OA1]

Attributions [F74-OA2]

3) Where sleeping rooms or bed spaces are provided

a) for residential clubs, schools, colleges and dormitories, at least one room or space, in addition to the rooms or spaces described in Sentence (2), shall be equipped with a visible warning system conforming to Article 3.2.4.19., and
b) for hotels and motels, at least one room or space for every 20 or part thereof, in addition to the rooms or spaces described in Sentence (1), shall be equipped with a visible warning system conforming to Article 3.2.4.19.

Attributions [F11-OS1.5]

Visible warning systems are required in each sleeping room and bed space that must conform to Subsection 3.8.3. and are also required in a percentage of other sleeping rooms and bed spaces.

4) Sleeping rooms and bed spaces provided in *care occupancies* where the *building* is not equipped with a 2-stage fire alarm system shall be equipped with a visible warning system conforming to Article 3.2.4.19. (See also Clause 3.2.4.3.(1)(c).)

Attributions [F11-OS1.5]

Where a 2-stage alarm system is provided, staff coordinate a response operation to the signal. A single-stage alarm system is permitted in some care occupancies, where residents will receive the audible alert at the same time as staff. In those instances, sleeping rooms and bed spaces are provided with visible signals in addition to audible signals.

5) Each *dwelling unit* in an apartment or condominium *building* designed primarily for senior citizens shall be provided with special outlet boxes and cover plates as described in Sentence 3.2.4.19.(6). (See also Sentence 3.2.4.19.(7).)

At a minimum, all dwelling units in apartment and condominium buildings designed as senior citizens' residences need to be provided with special strobe light outlet boxes and cover plates. The installation of strobe lights is required in any dwelling unit that serves a tenant who may be deaf or hard of hearing. It can be difficult to anticipate how many or which dwelling units may require strobe lights. Twenty percent of the total number of dwelling units is recommended as a minimum for sizing the power supply, though a greater percentage is recommended.

3.8.3. Design

Subsection 3.8.3. contains design requirements only. It explains how to make buildings and facilities accessible to people with disabilities.

3.8.3.1. Design Standards

1) *Buildings* or parts thereof and facilities that are required to be *accessible* shall be designed in accordance with

a) this Subsection, or

b) for each *accessible* application listed independent of other *accessible* applications, the applicable provisions of CSA B651, "Accessible Design for the Built Environment," listed in Table 3.8.3.1.

(See Note A-3.8.3.1.(1).)

Intent: To state the application of Subsection 3.8.3.

Intent: To exempt accessible design requirements from complying with Subsection 3.8.3. when design requirements of CSA B651 are used for the accessible paths of travel and accessible facilities, because CSA-B651 provides an acceptable level of performance on accessibility and safety in use.

Table 3.8.3.1. *(continued)*
Accessible Design Provisions
Forming Part of Sentence 3.8.3.1.(1)

***Accessible* Application (Code References)**	**Applicable CSA B651 Provisions**
Interior accessible routes (3.8.3.2.)	4.3 and 5.1
Exterior accessible routes (3.8.3.3.)	8.2.1 to 8.2.5 and 8.2.7
Passenger pickup areas (3.8.3.4.)	9.3
Ramps (3.8.3.5.)	5.3 and 5.5
Doors and doorways (3.8.3.6.)	5.2
Passenger-elevating devices (3.8.3.7.)	5.6.2
Operating controls (3.8.3.8.)	4.2

Table 3.8.3.1. *(continued)*
Accessible Design Provisions
Forming Part of Sentence 3.8.3.1.(1)

***Accessible* Application (Code References)**	**Applicable CSA B651 Provisions**
Signage and indicators (3.8.3.9.)	4.3.5, 4.5 and 9.4
Drinking fountains (3.8.3.10.)	6.1
Washroom facilities (3.8.3.11. to 3.8.3.15.)	6.2 and 6.3
Bathing facilities (3.8.3.16. and 3.8.3.17.)	6.5
Communication (3.8.3.18. and 3.8.3.20.)	6.6
Counters (3.8.3.19. and 3.8.3.20.)	6.7.1
Spaces in seating areas (3.8.3.21.)	6.7.2

A-3.8.3.1.(1) Accessible Design Standards. Code users who opt to apply the CSA B651 provisions listed in Table 3.8.3.1. must do so without exception: they cannot randomly select and apply a mix of provisions from the British Columbia Building Code and that standard.

2) The design for each *accessible* application listed in Table 3.8.3.1. shall comply entirely with Clause (1)(a) or Clause (1)(b).

Code users have the option to use CSA B651-12, Accessible Design for the Built Environment, for the design requirements instead of those contained in Subsection 3.8.3. of the British Columbia Building Code. As an internationally respected Canadian accessibility standard, CSA B651 offers a credible single source for buildings and built environment accessibility requirements.

Designers may choose a compliance path for each accessible application listed in the right-hand column. Once the compliance path is selected, it must be followed without mixing provisions from the alternative compliance path. Each accessible application is permitted a separate compliance path choice. It is permitted that sections 5.3 and 5.5 of CSA B651 (in their entirety) be chosen for ramps and that Building Code Article 3.8.3.6. (in its entirety) be chosen for doors and doorways. In this example, all ramps in the building must be designed to CSA B651 and all doors in the building designed to Building Code Article 3.8.3.6.

As some buildings are required to comply with the provincial codes as well as CSA B651, this alternative eliminates some compliance difficulties for designers and building owners as well as authorities having jurisdiction.

3.8.3.2. Accessible Path of Travel

1) Except as required elsewhere in this Part or as permitted by Article 3.8.3.6. pertaining to doorways, an *accessible* path of travel shall have

a) except for handrails, that are permitted to project not more than 100 mm from either or both sides into the clear area, an unobstructed width of not less than 1 500 mm except that the unobstructed width may be reduced to not less than

i) 1 100 mm between any two structures or fixtures in public aisles in merchandising establishments and exhibition facilities,

ii) 920 mm for permanent food service lines, and

iii) 810 mm through turnstiles, controlled checkout lanes or other restricted passageways constructed to control the flow or pedestrian traffic, and

b) an unobstructed height of not less than 1 980 mm for the full width of the route.

Attributions [F73-OA1]

Intent: To limit the probability that people using a manual wheelchair or other manual mobility assistance device will not be able to circulate within a building without the assistance of another person.

The requirement to have an area free from obstructions is to help people with low vision navigate. Examples of obstructions include: directional signs, tree branches and guy wires. The only permitted projections are handrails. Although a height greater than 1980 mm is preferred, in order to maintain consistency, this minimum height corresponds to the minimum headroom clearance for doorways.

Although 1100 mm is the minimum width required between structures or fixtures in public aisles, it is recommended that, particularly for retail stores, this be increased to at least 1500 mm to allow wheelchairs and shopping carts to safely pass.

Figure 3.8.3.2.(1)-A shows clear aisle ways.

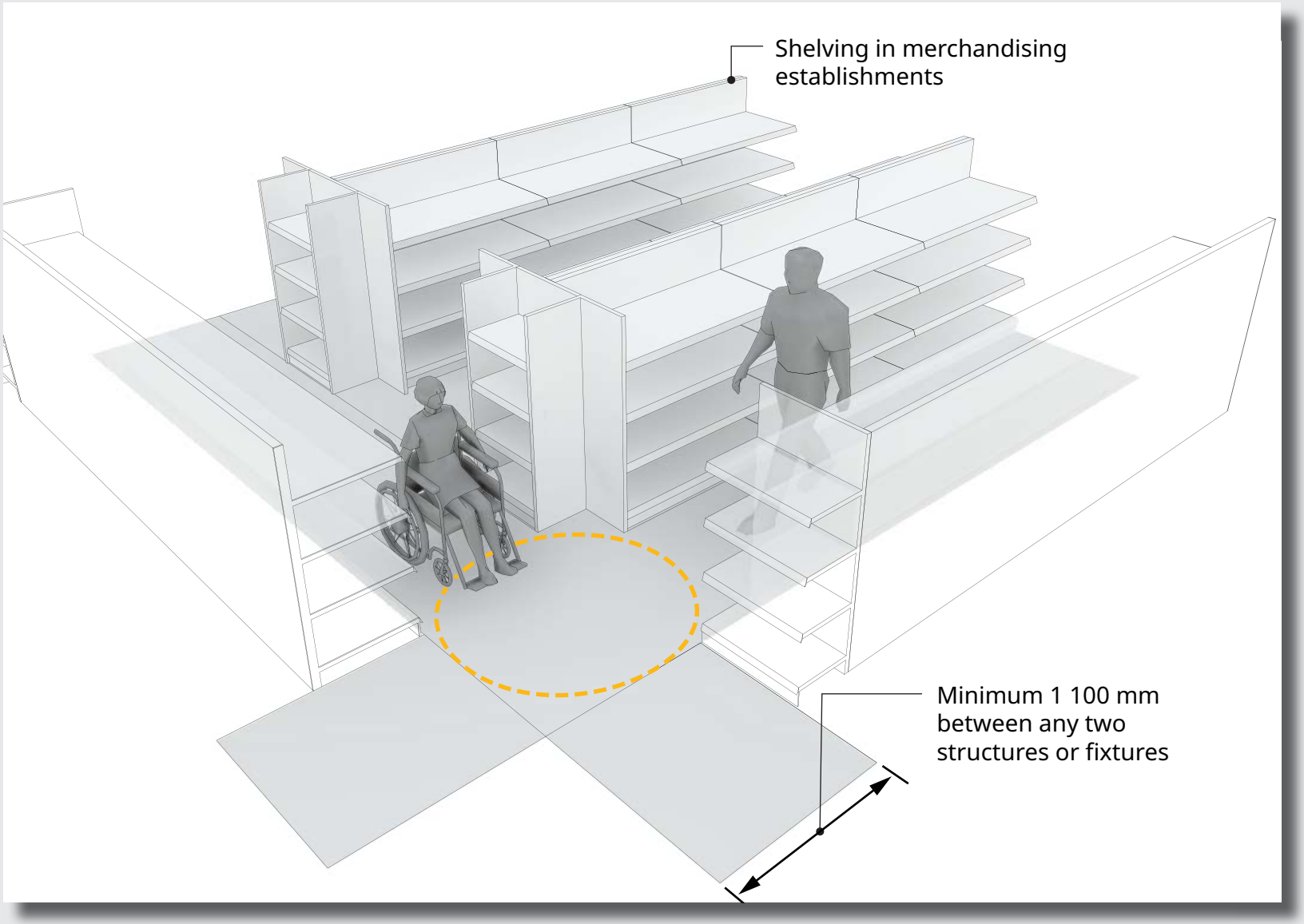

Figure 3.8.3.2.(1)-A
Aisles

Figures 3.8.3.2.(1)-B shows reduced clear widths for restricted passageways.

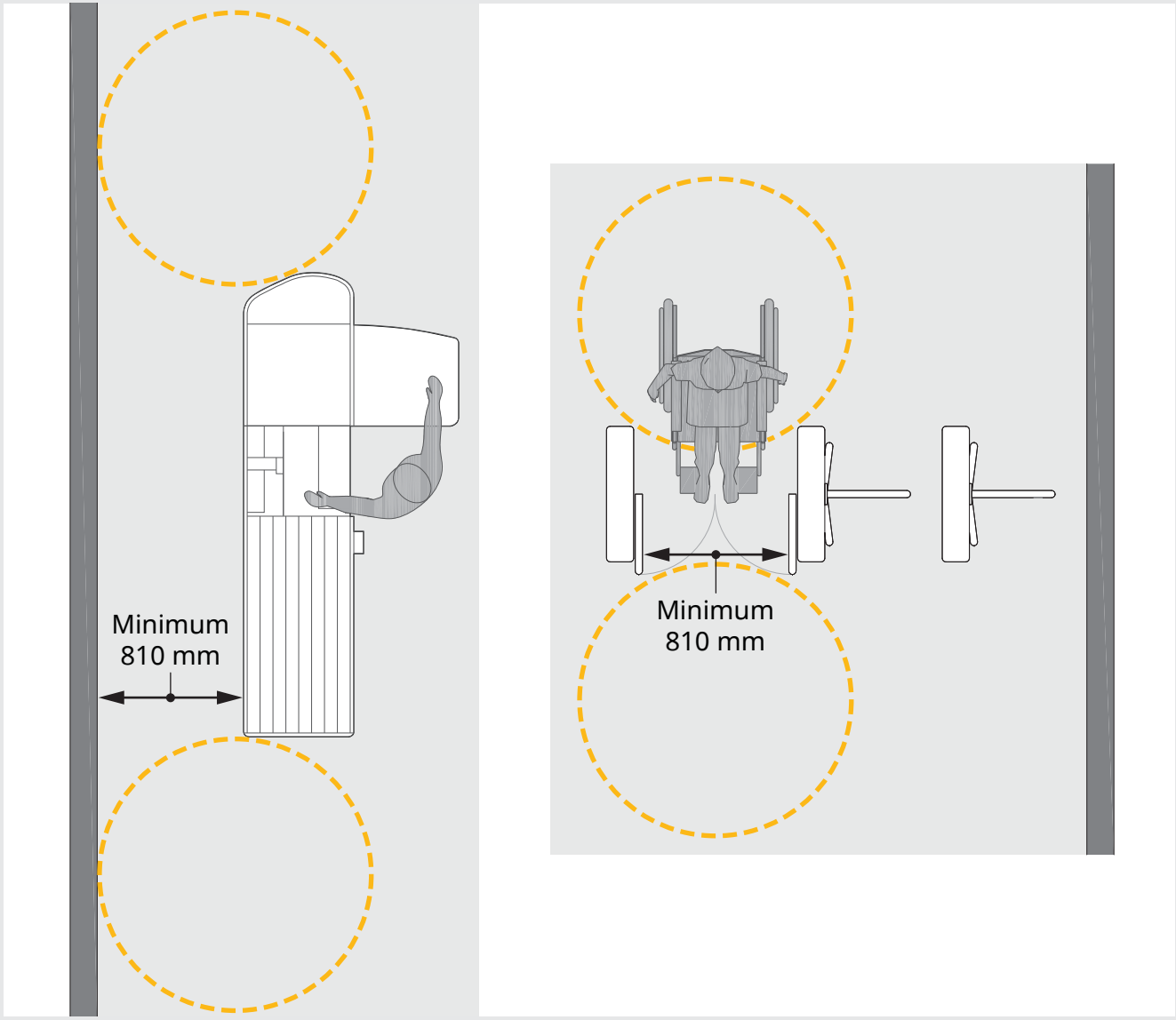

Figure 3.8.3.2.(1)-B
Restricted passageways

Figure 3.8.3.2.(1)-C shows reduced clear widths for food service lines.

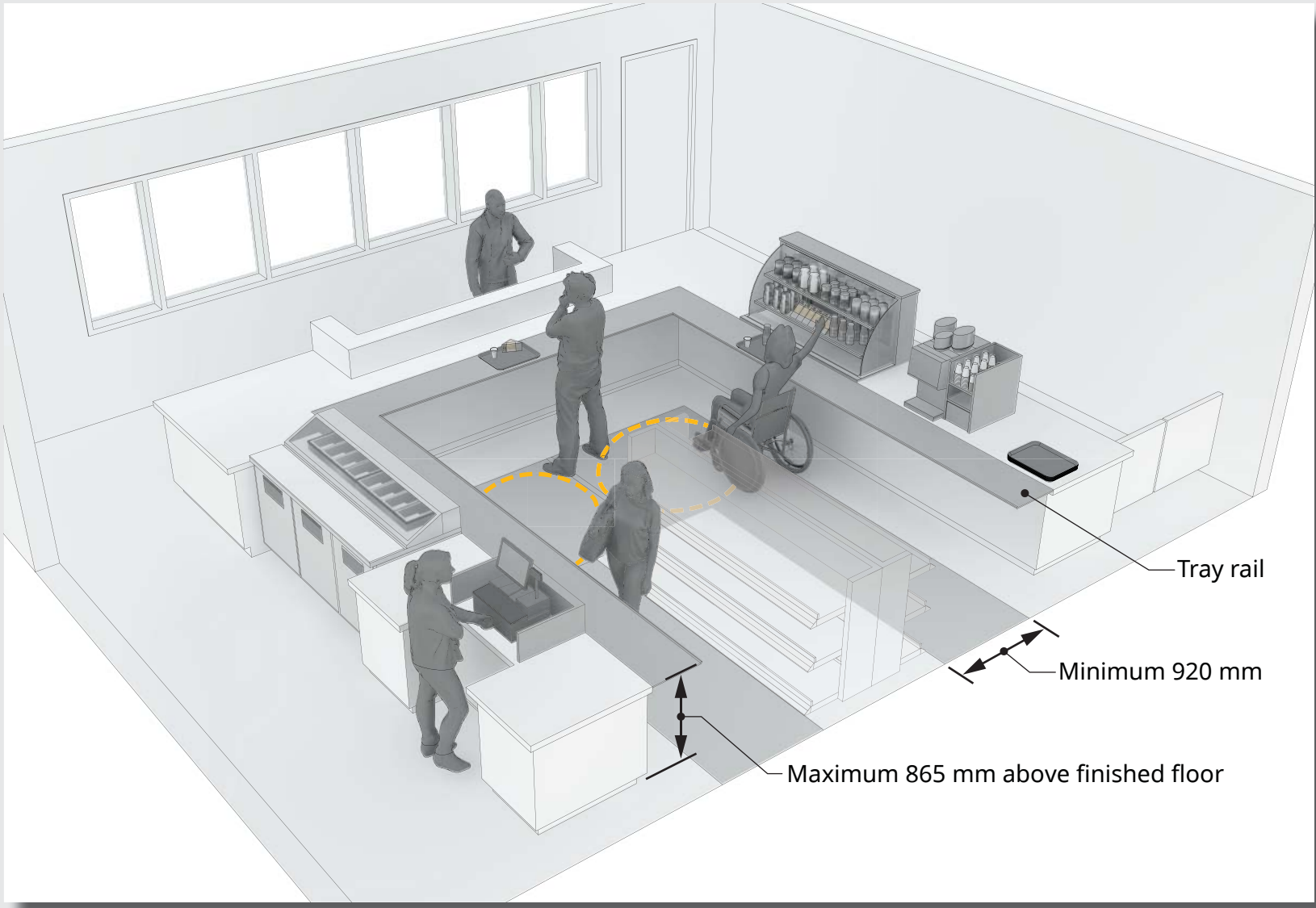

Figure 3.8.3.2.(1)-C
Food service lines

Figure 3.8.3.2.(1)-D shows clear width of an accessible path of travel.

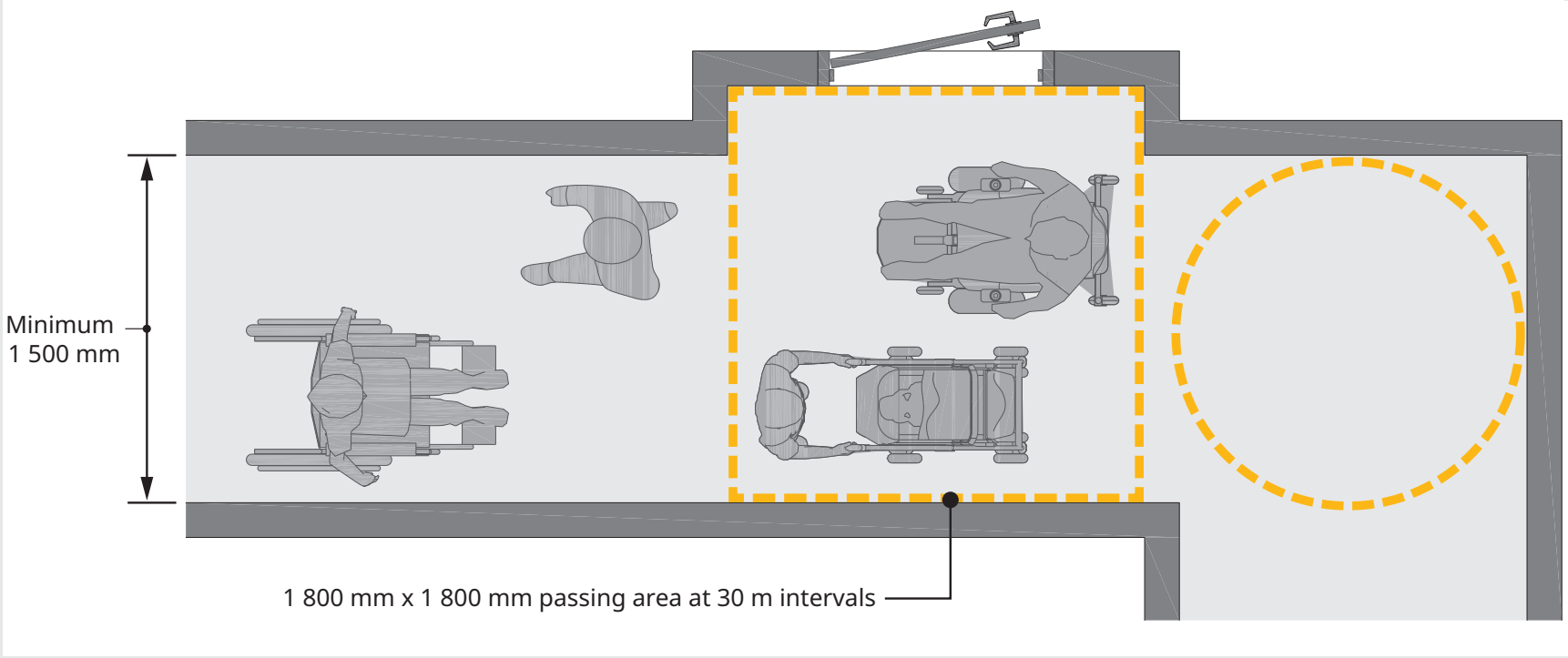

Figure 3.8.3.2.(1)-D
Width of accessible path of travel

Figure 3.8.3.2.(1)-E shows an accessible path of travel connecting spaces and facilities within a building.

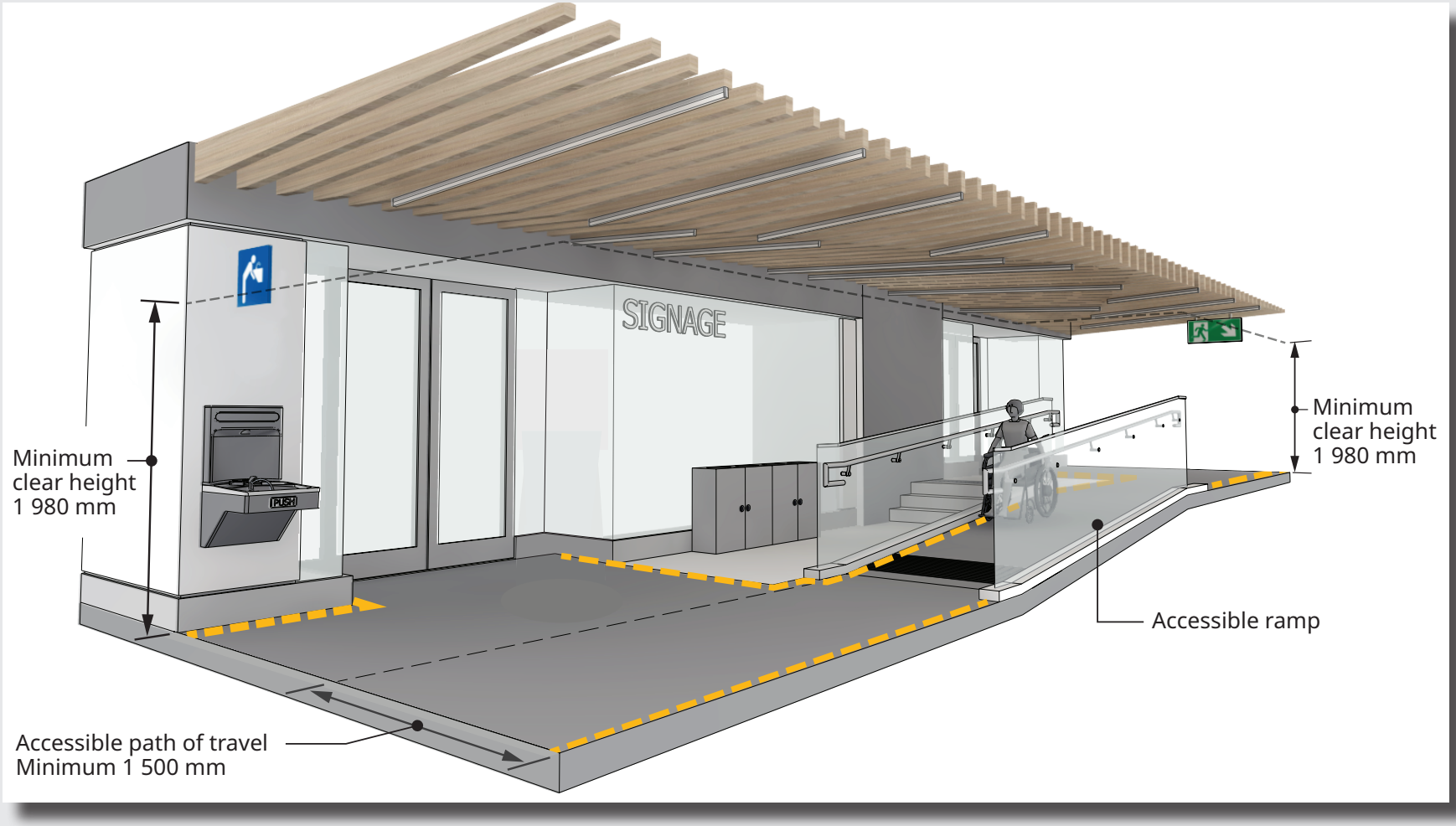

Figure 3.8.3.2.(1)-E
Accessible path of travel

2) Interior and exterior walking surfaces that are within an *accessible* path of travel shall

a) have no opening that will permit the passage of a sphere more than 13 mm in diameter,

b) have any elongated openings oriented approximately perpendicular to the direction of travel,

c) be stable, firm and slip-resistant,

d) have a cross slope no steeper than 1 in 50,

e) be beveled at a maximum slope of 1 in 2 at changes in level between 6 mm and 13 mm,

f) be provided with sloped floors or ramps at changes in level more than 13 mm, and

g) be designed as a ramp complying with Article 3.8.3.5. where the floor or walk has a slope steeper than 1 in 20.

(See Note A-3.8.3.2.(2).)

A-3.8.3.2.(2) Surfaces in an Accessible Path of Travel. Floor finishes, including walk-off matts and carpet, should be selected, installed and securely fixed to provide a firm and stable surface so that persons using wheelchairs, walkers or other mobility aids can easily travel over them without tripping or expending undue energy. Other than very high-density, short-pile carpeting, most carpeting does not meet these criteria.

Furthermore, where the path of travel is exposed to intense light conditions, such as daylight or directional lighting, a low-glare or matte floor surface should be selected, as glare from floor surfaces can influence all users' perception and be particularly problematic for persons with low vision. For the same reasons, heavily patterned flooring should also be avoided.

Attributions [F30-OS3.1]

Intent: To limit the probability that a manual wheelchair or other manual mobility assistance device used by a person will be trapped in a walking surface, which could lead to the loss of balance of the person, which could lead to harm to the person or people nearby.

Intent: To limit the probability that people using a manual wheelchair or other manual mobility assistance device will trip, which could lead to harm to the person or people nearby.

Intent: To limit the probability that people using a manual wheelchair or other manual mobility assistance device will slip or lose their balance, which could lead to harm to the person or to people nearby.

Attributions [F73-OA1]

Intent: To limit the probability that a manual wheelchair or other manual mobility assistance device used by a person will be trapped in a walking surface, which could impede the person's ability to circulate.

Intent: To limit the probability that a walking surface will not adequately support a manual wheelchair or other manual mobility assistance device used by a person, which could impede the person's ability to circulate.

Intent: To limit the probability that people using a manual wheelchair or other manual mobility assistance device will not be able to circulate without the assistance of another person.

It is recommended that gratings be avoided on walks, especially at the bottom inclines of ramps, but if used should not present a hazard to people using wheelchairs or other mobility devices. Extended openings in line with the path of travel can trap wheelchair wheels or other mobility devices and openings larger than 13 mm can trap crutch and cane tips.

Clause (2)(e) requires changes in level of surfaces within an accessible path of travel to provide a functional transition.

Abrupt changes in level should be kept to a minimum and where they do occur, they must not exceed 13 mm. Figure 3.8.3.2.(2)-A provides examples of how abrupt changes in surface elevation might occur. Figure 3.8.3.2.(2)-B shows joints in surfaces of paths of travel with a grate perpendicular to the direction of travel. Consider colour contrasting transitions where the change in level may not be obvious.

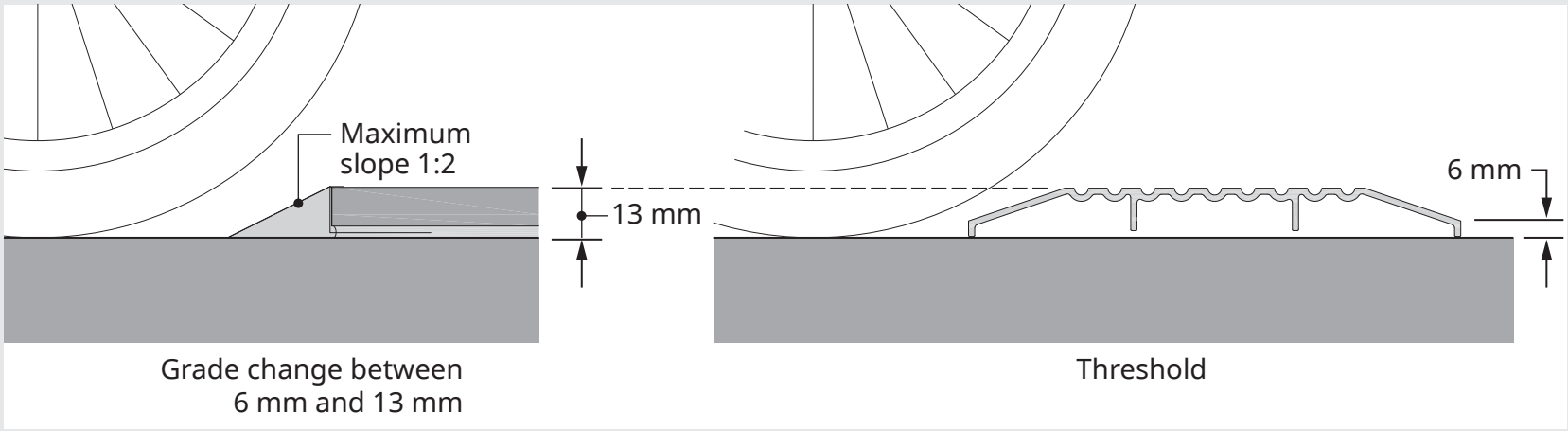

Figure 3.8.3.2.(2)-A
Abrupt changes in surface elevation

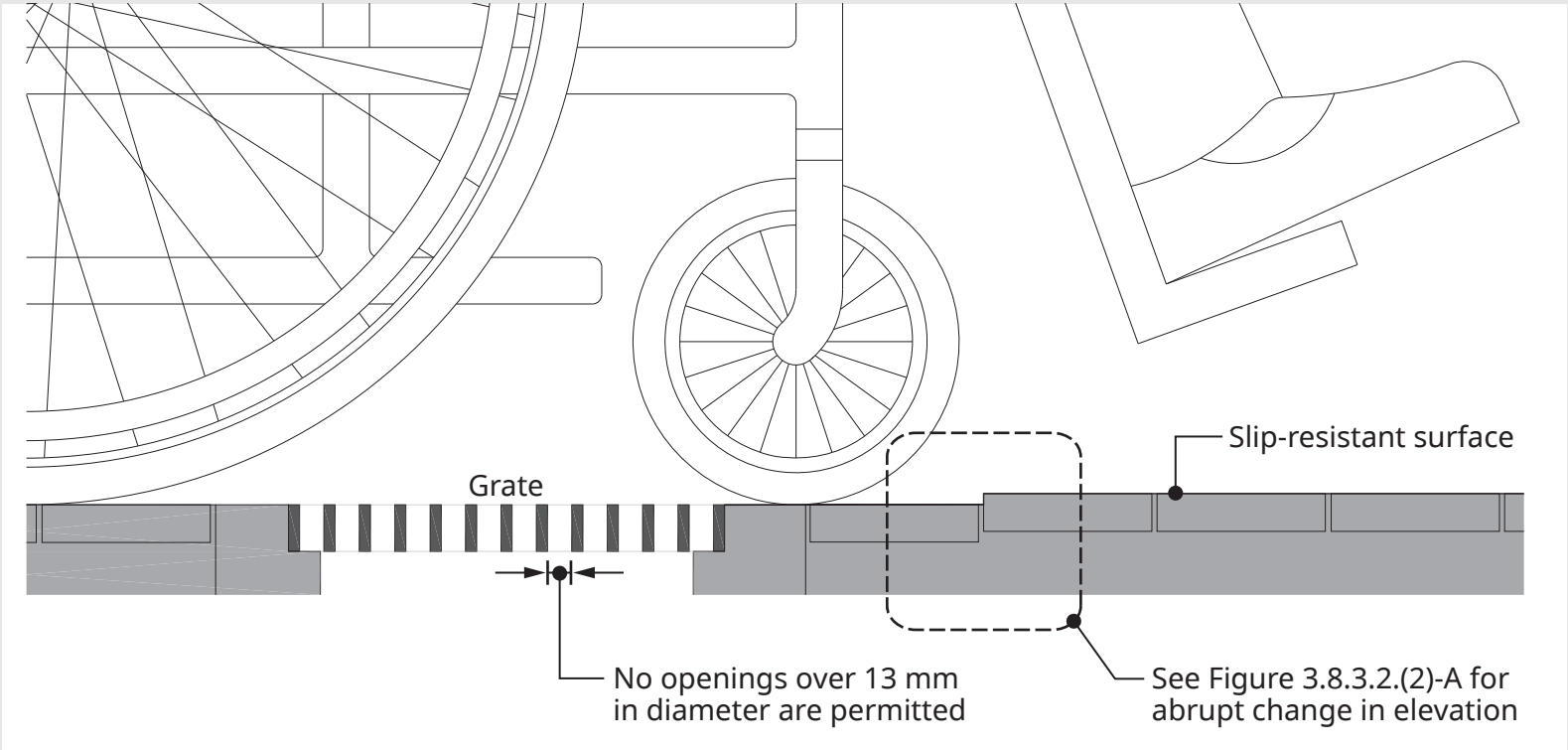

Figure 3.8.3.2.(2)-B
Joints in surfaces of paths of travel

Walks must have a firm, slip-resistant and even surface, and facilitate a continuous and uninterrupted path of travel. Uneven surfaces can be hazardous not only to people using wheelchairs but also all pedestrians. When pre-cast units such as brick pavers, concrete slabs or tiles are used, use care to ensure that all joints are as flush as possible, with a minimum tolerance of 6 mm.

A general guide for the slip-resistance of materials is provided in the Appendix of this handbook.

Where the designated accessible path of travel is level and even with the adjacent walking surface, it should have a texture, not less than the required width, that differs from the texture of the surrounding walking surface. Using brick pavers to define a walkway through a concrete plaza is an example of a difference in texture that aids people with disabilities. This would be applicable only to large open areas such as plazas and would not, for example, apply to a wide concrete walk with grass on each side.

3) An *accessible* path of travel is permitted to include ramps, passenger elevators or other platform-equipped passenger-elevating devices to overcome a difference in level. (See Note A-3.8.3.2.(3).)

Intent: To clarify what types of platform-equipped passenger-elevating devices are examples of acceptable solutions to overcome differences in level.

A-3.8.3.2.(3) Passenger-Elevating Devices. Inclined moving walkways that are used to provide access should not have a running slope steeper than 1 in 20.

4) The width of an *accessible* path of travel that is more than 30 m long shall be increased to not less than 1 800 mm for a length of 1 800 mm at intervals not exceeding 30 m.

Attributions [F73-OA1]

Intent: To supersede the minimum width requirements stated in Sentence 3.8.3.2.(1) and Clause 3.8.3.3.(1)(b) and require a greater minimum width for long accessible paths of travel, on the basis that an inadequate width does not permit two people using manual wheelchairs or other manual mobility assistance devices to pass each other. This is to limit the probability that people using a manual wheelchair or other manual mobility assisting device will have to wait an excessively long time for another person using a manual wheelchair or other manual mobility assistance device to complete the transit along the accessible path of travel.

5) An *accessible* path of travel shall be equipped to provide illumination in accordance with Sentences 3.2.7.1.(1) and (2). (See also Sentence 3.2.7.1.(3) and Article 9.34.2.7.)

Attributions [F30-OS3.1]
Attributions [F73-OA1]
Attributions [F74-OA2]

Accessible paths of travel shall have the same level of illumination as for exits. The level of illumination may be reduced when emergency lighting is in use.

3.8.3.3. Exterior Walks

1) Exterior walks that form part of an *accessible* path of travel shall

a) have a slip-resistant, continuous and even surface,

b) be not less than 1 500 mm wide, and

c) have a level area conforming to Clause 3.8.3.5.(1)(c) adjacent to an entrance doorway.

Attributions (a) [F73-OA1]

Intent: To limit the probability that people using a manual wheelchair or other manual mobility assistance device will not be able to travel along an exterior path of travel without the assistance of another person.

Attributions (a) [F30-OS3.1]

Intent: To limit the probability that people using a manual wheelchair or other manual mobility assistance device will slip or fall on an exterior walk, which could lead to harm to the person or people nearby.

Attributions (b) [F73-OA1]

Intent: To limit the probability that people using a manual wheelchair or other manual mobility assistance device will not be able to travel along an exterior path of travel without the assistance of another person.

Intent: To expand the application of Clause 3.8.3.5.(1)(c) to areas adjacent to the entrance doorways of exterior walks.

Consider how to protect all exterior paths of travel from snow and ice build-up. A general guide for the slip-resistance of materials is provided in the Appendix of this handbook.

2) Exterior walks that form part of an *accessible* path of travel may contain curb ramps that shall

Attributions [F30-OS3.1]

Attributions [F73-OA1]

a) have a running slope

i) between 1 in 8 to 1 in 10 where the vertical rise is less than 75 mm, and

ii) between 1 in 10 to 1 in 12 where the vertical rise is 75 mm to 200 mm,

b) have a width of not less than 1 500 mm exclusive of flared sides,

c) have a surface including flared sides that shall

i) be slip-resistant,

ii) have tactile walking surface indicators conforming to Article 3.8.3.9., and

iii) have a smooth transition from the curb ramp to the adjacent surfaces, and

d) have flared sides with a slope of not more than 1 in 12 where pedestrians are likely to walk across them.

Cross slope should be avoided wherever possible. A general guide for the slip-resistance of materials is provided in the Appendix of this handbook.

3) Curb ramps described in Sentence (2) do not require handrails or *guards*.

Curb ramps, or curb cuts, do not require handrails. They should be as gradual as possible and should not project out onto a road surface unless there is little or no vehicle traffic. A detectable difference in surface texture will assist pedestrian users to gain a secure foothold and, together with the change in plane, will assist people with disabilities. Where a curb ramp is perpendicular to a path of travel, the sides need to be sloped to support pedestrians who unexpectedly step down onto the ramp.

If there is a drop at the bottom of the curb ramp, it shall be not more than 13 mm and beveled at a maximum slope of 1 in 2 when between 6 mm and 13 mm.

Figure 3.8.3.2.(2)-C shows an exterior path of travel with a curb ramp.

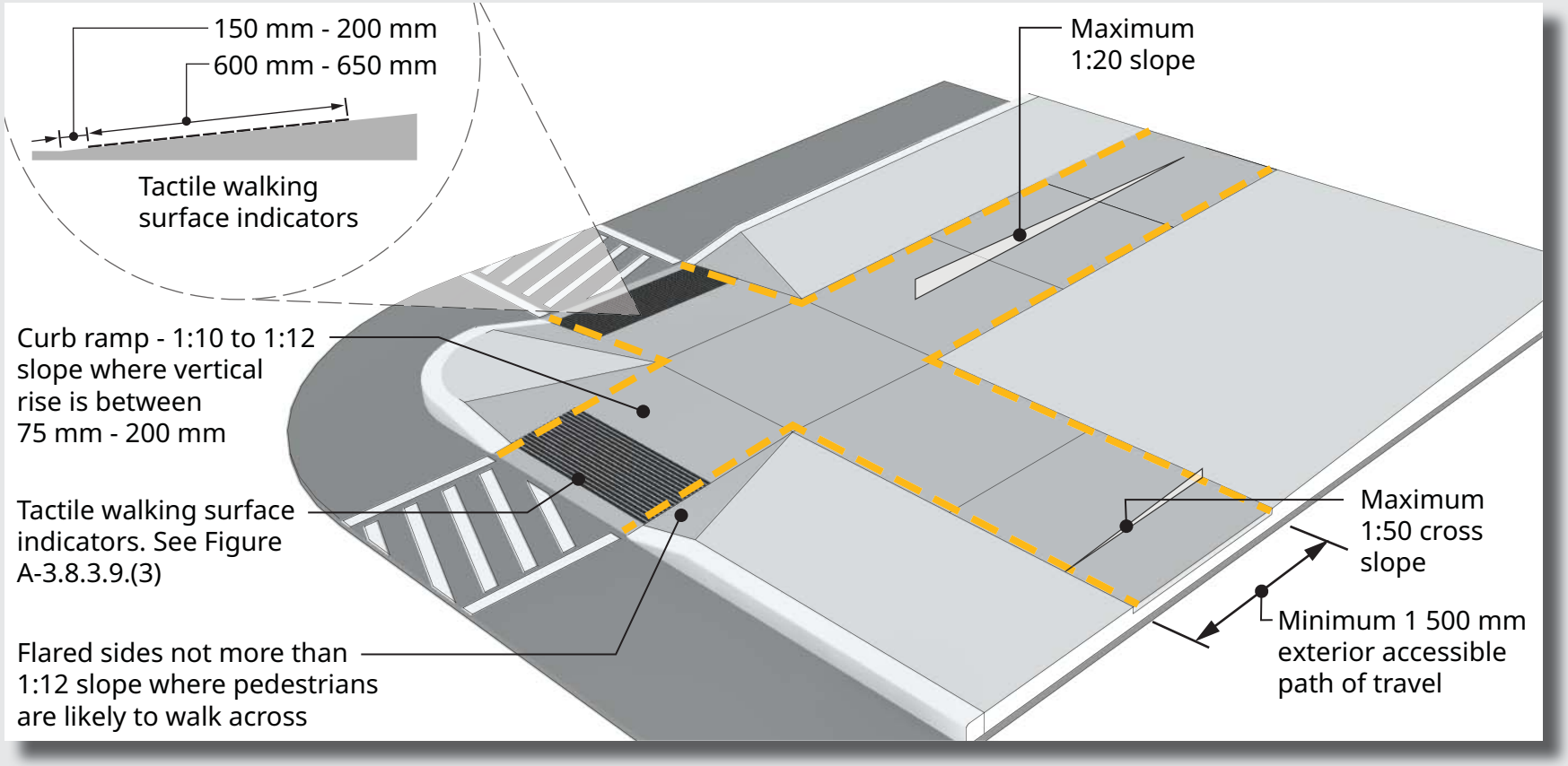

Figure 3.8.3.2.(2)-C
Exterior paths of travel

3.8.3.4. Passenger-Loading Zones

1) If a passenger-loading zone is provided, it shall have

a) an access aisle not less than 1 500 mm wide and 6 000 mm long adjacent and parallel to the vehicle pull-up space,

b) a curb ramp constructed in accordance with Sentence 3.8.3.3.(2), where there are curbs between the access aisle and the vehicle pull-up space and the difference in elevation between levels is not more than 200 mm, and

c) a clear height of not less than 2 750 mm at the pull-up space and along the vehicle access and egress routes.

Attributions (a) [F74-OA2]

Intent: To limit the probability that people using a manual wheelchair or other manual mobility assistance device will not be able to travel between a passenger loading zone and an accessible entrance without the assistance of another person.

Attributions (b) [F73-OA1]

Intent: To limit the probability that people using a manual wheelchair or other manual mobility assistance device will not be able to travel between a passenger loading zone and an accessible entrance without the assistance of another person.

Attributions (c) [F74-OA2]

Intent: To limit the probability that vehicles transporting manual wheelchairs will be unable to pass underneath an overhang, which could lead to:

- such vehicles not having access to exterior passenger loading zones, or
- such vehicles hitting the overhangs and being damaged.

3.8.3.5. Ramps

1) Except as provided in Sentence 3.8.3.3.(2), a ramp located in an *accessible* path of travel shall

a) have a clear width not less than

i) 1 500 mm,

ii) 915 mm if the ramp serves a passageway that is 6 m or less in width, or

iii) 915 mm if a second ramp with a clear width not less than 915 mm also serves a passageway that is greater than 6 m in width, (see Note A-3.4.3.4.),

b) have a slope not more than 1 in 12 (see Note A-3.8.3.5.(1)(b)),

A-3.8.3.5.(1)(b) Ramp Slopes. Ramps with a slope of more than 1 in 16 can be very difficult for persons with certain physical disabilities to manage. Even though they pose less of a problem for persons using motorized wheelchairs, these ramps can be unsafe to descend, especially in cold climates. Although Article 3.8.3.5. permits slopes on ramps as great as 1 in 12 for distances of up to 9 m, slopes of 1 in 20 are safer and less strenuous. When limited space is available, as may be the case during renovations, ramps with a slope of up to 1 in 12 should be restricted to lengths not exceeding 3 m whenever possible. A strip contrasting in colour and texture should be used at the top and bottom of ramps to warn persons with low or no vision.

c) have a level area not less than 1 500 by 1 500 mm at the top

Attributions (a),(b),(c),(d),(e) [F73-OA1]

Intent: To limit the probability that people using a manual wheelchair or other manual mobility assistance device will have difficulty using a ramp without the assistance of another person.

Intent: To limit the probability that people using a manual wheelchair or other manual mobility assistance device will not be able to rest and remain stationary while opening a door without the assistance of another person.

Intent: To limit the probability that the level area of a ramp will be of insufficient size to provide a clear width beyond the latch edge of the door, which could lead to people using a manual wheelchair or other manual mobility assistance device being unable to negotiate the manual wheelchair or device past the door without assistance.

Intent: To limit the probability that people using a manual wheelchair or other manual mobility assistance device will not be able to rest and remain stationary in areas along a ramp without the assistance of another person.

Attributions (b),(c),(d),(e),(f) [F30-OS3.1]

Intent: To limit the probability that people using a manual wheelchair or other manual mobility assistance device will not be able to rest along a ramp, which could lead to a loss of control, which could lead to harm to the person or people nearby.

Intent: To limit the probability that people using a manual wheelchair or other manual mobility assistance device will be unable to control the movement of the manual wheelchair or device, which could lead to harm to the person or people nearby.

Intent: To exempt handrails from the requirement for a greater minimum width as stated in Sentence 3.8.3.2.(1) and permit a lesser minimum width, on the basis that this affords users better control.

Intent: To limit the probability that people using a manual wheelchair or other manual mobility assistance device will not be able to rest and remain stationary while opening a door, which could lead to a loss of control, which could lead to harm to the person or people nearby.

Intent: To expand the application of Articles 3.4.6.5. and 3.4.6.6. to ramps in an accessible path of travel.

and bottom and at intermediate levels of a ramp leading to a door, so that on the latch side the level area extends not less than

i) 600 mm beyond the edge of the door opening where the door opens towards the ramp, or

ii) 300 mm beyond the edge of the door opening where the door opens away from the ramp,

(see Note A-3.8.3.5.(1)(c)),

A-3.8.3.5.(1)(c) Landing Design at Doorways Leading to Ramps.

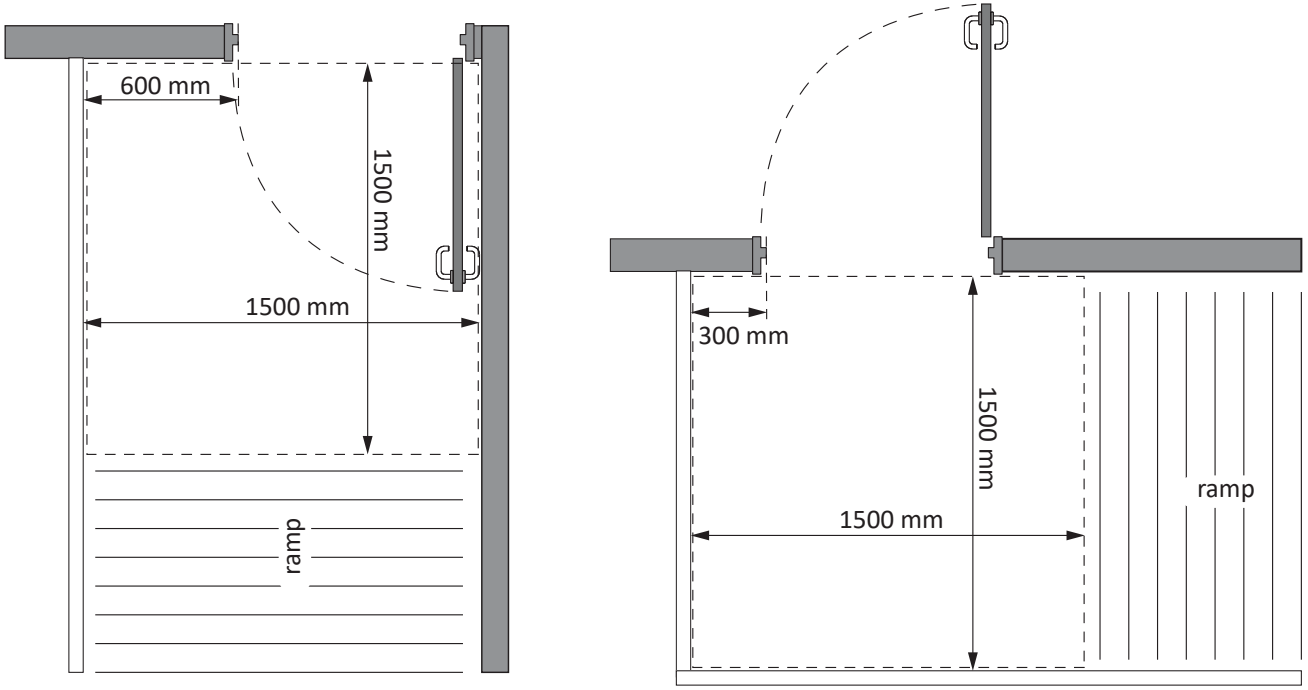

Figure A-3.8.3.5.(1)(c)
Landing design at doorways leading to ramps

d) have a level area not less than 1 500 mm long and at least the same width as the ramp

i) at intervals not more than 9 m along its length, and

ii) where there is an abrupt change in the direction of the ramp, and

e) except as provided in Sentences (2) and (3), be equipped with a handrail on each side of the ramp conforming to Article 3.4.6.5., except that they shall be not less than 865 mm and not more than 965 mm high, and

f) be equipped with *guards* conforming to Article 3.4.6.6.

Ramps shall meet the minimum width requirements based on: the width of the passageway; and, if more than one ramp is provided. Where a passageway is not more than 6 m in width, one ramp is required as shown in Figure 3.8.3.5.(1)-A. Figure 3.8.3.5.(1)-B shows an alternative where a passageway is greater than 6 m in width. Designers have the option of one ramp not less than 1500 mm wide, or two ramps each not less than 915 mm wide, which may be preferred for locations such as shopping malls, theatres, stadiums and other facilities where high pedestrian traffic is anticipated.

Ramps are not required to be adjacent to a wall.

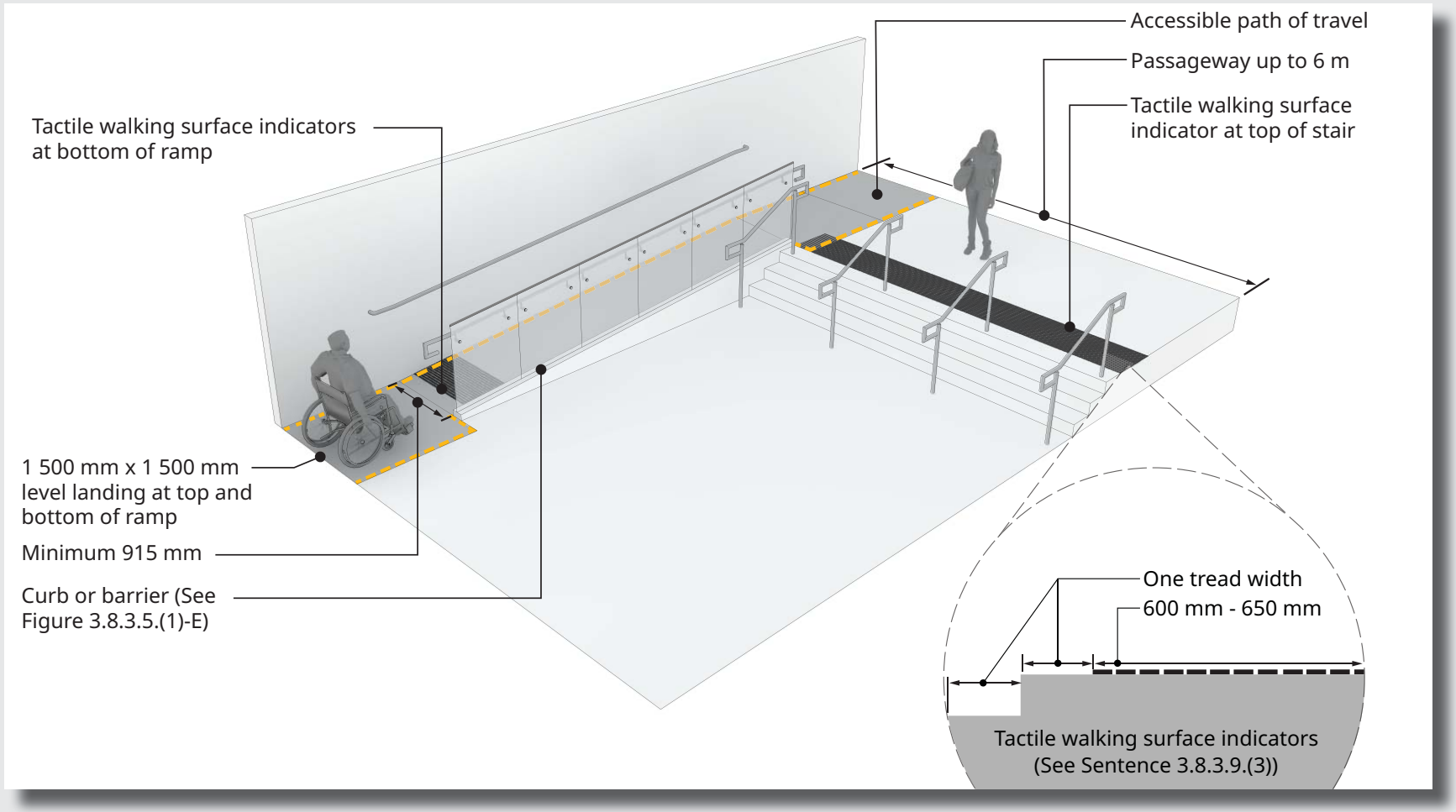

Figure 3.8.3.5.(1)-A
Ramps in passageways up to 6 m wide

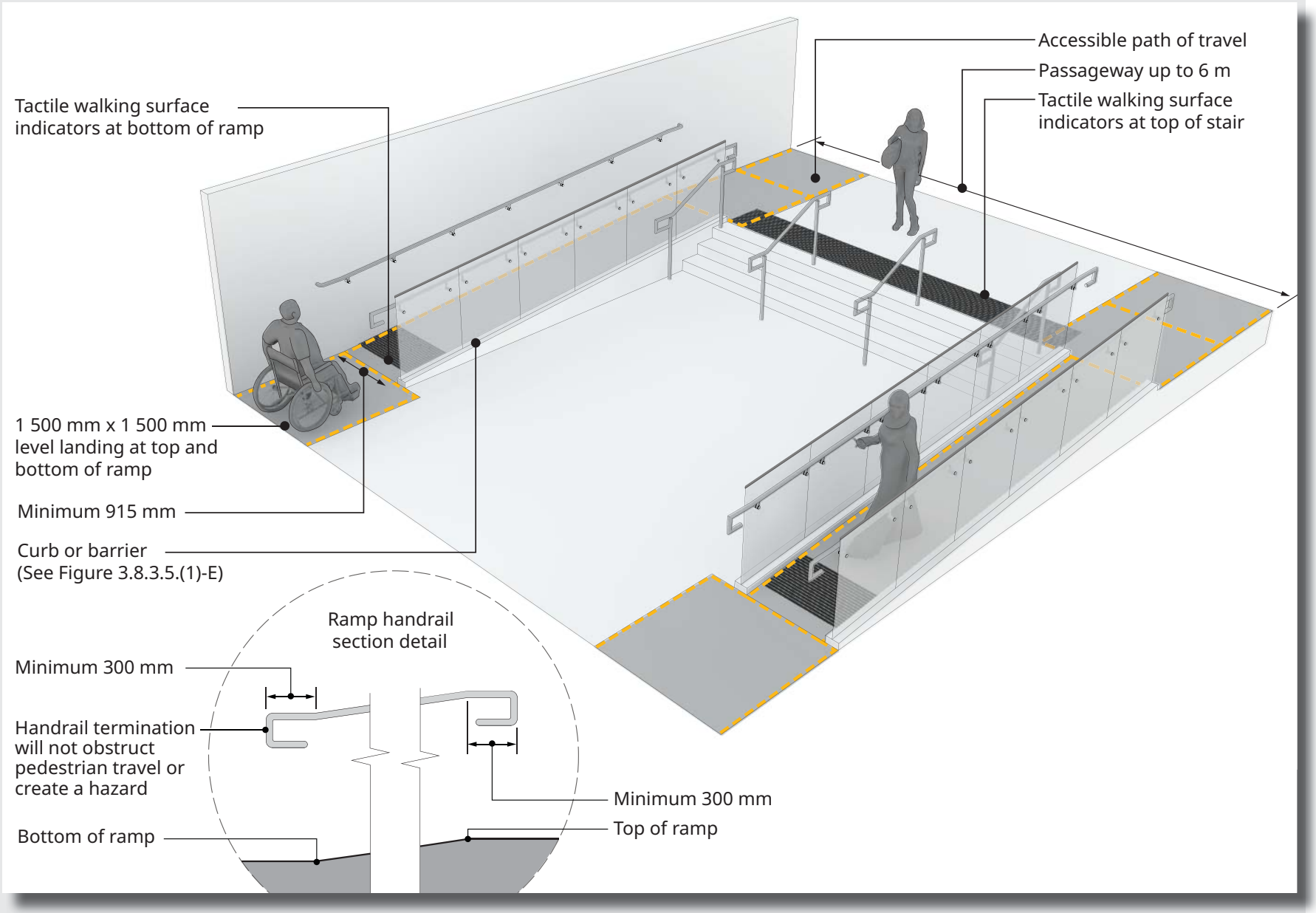

Figure 3.8.3.5.(1)-B
Two ramps in passageways greater than 6 m wide

Figure 3.8.3.5.(1)-C shows a passageway with one ramp in a passageway greater than 6 m in width.

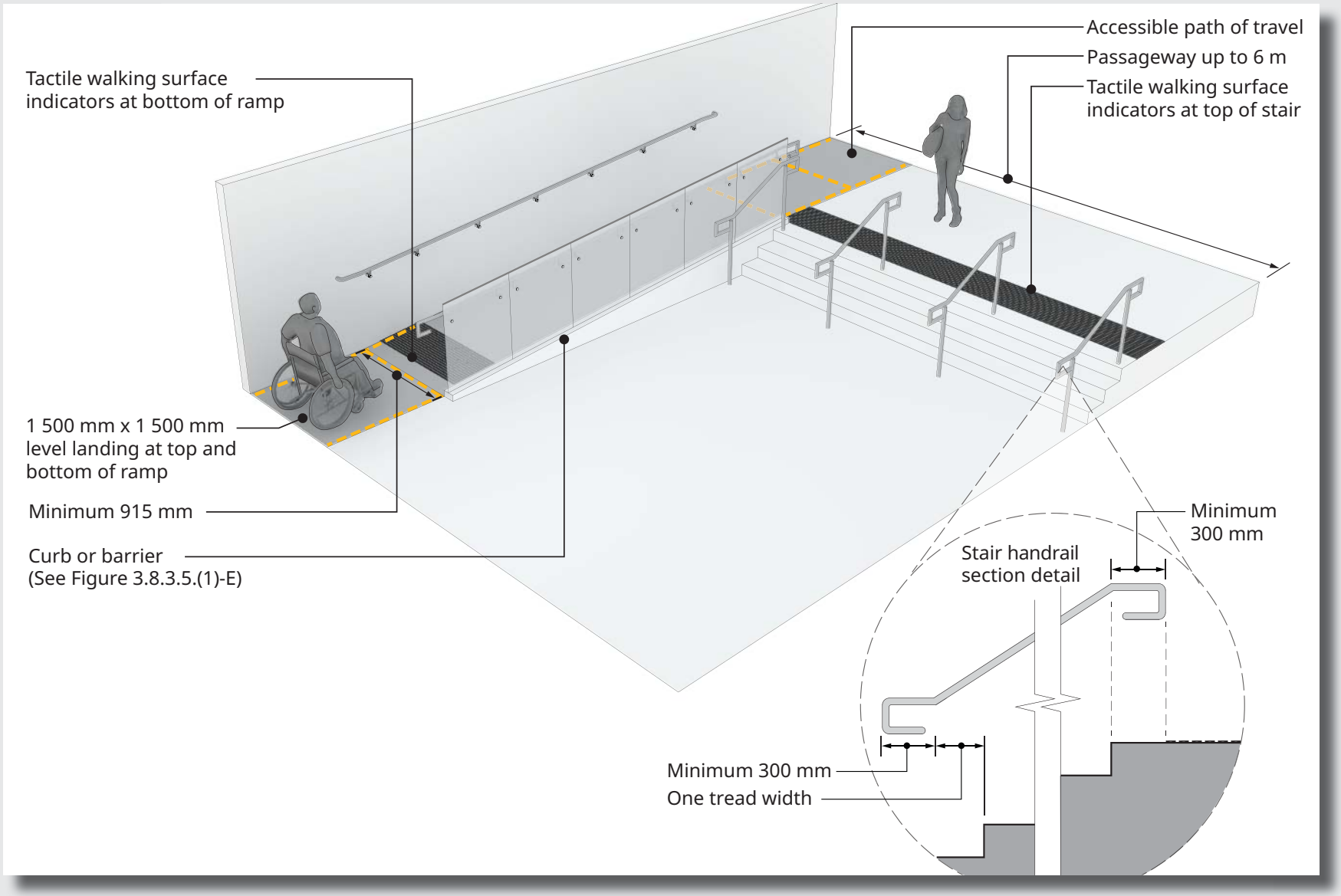

Figure 3.8.3.5.(1)-C
One ramp in passageways greater than 6 m wide

2) Handrails installed in addition to required handrails need not comply with the height requirements stated in Clause (1)(e).

Intent: To define the method of measuring the height of handrails for stairs and ramps.

3) The requirement for handrails in Clause (1)(e) need not apply to a ramp serving as an aisle for fixed seating.

Intent: To exempt aisles serving fixed seating from the requirement stated in Clause 3.8.3.5.(1)(e), which would otherwise require handrails, on the basis that the handrails will not allow people to have access to rows of seats from the aisle.

4) The surfaces of ramps and landings shall

a) be hard or resilient where the ramp is steeper than 1 in 15 (see Note A-3.8.3.5.(4)(a)),

Attributions (a) [F73-OA1]

Intent: To limit the probability that people using a manual wheelchair or other manual mobility assistance device will have difficulty using a ramp without the assistance of another person.

A-3.8.3.5.(4)(a) Surface of Ramps. Sentence 3.8.3.2.(2) requires that all walking surfaces in an accessible path of travel be stable and firm to limit the effort required by persons using wheelchairs or other mobility aids. Therefore, Sentence 3.8.3.5.(4) requires that hard or resilient flooring be used on the surfaces of steeper ramps. Furthermore, carpet and like materials should not be installed on any ramp.

b) have a cross slope no steeper than 1 in 50, and

c) where exposed to water, be designed to drain.

Attributions (b) and (c) [F30-OS3.1]

Intent: To limit the probability that surfaces of ramps and landings will have an excessive cross-slope, or will not drain properly, which could lead to people slipping, tripping or falling, which could lead to harm.

5) Ramps and landings not at ground level or adjacent to a wall shall have edge protection consisting of

a) a curb not less than 75 mm high, or

b) a raised barrier or rail located not more than 100 mm from the ramp or landing surface.

Attributions [F30-OS3.1]

Intent: To limit the probability that due to the absence of edge protection, a mobility device will fall off the edge of ramps or landings not at grade, which could lead to people tripping or falling, which could lead to harm.

6) Reserved.

Ramps are important to people using wheelchairs and wheeled mobility devices, but also benefit people with strollers and delivery carts. Accessibility between elevations by both ramps and stairs should be considered.

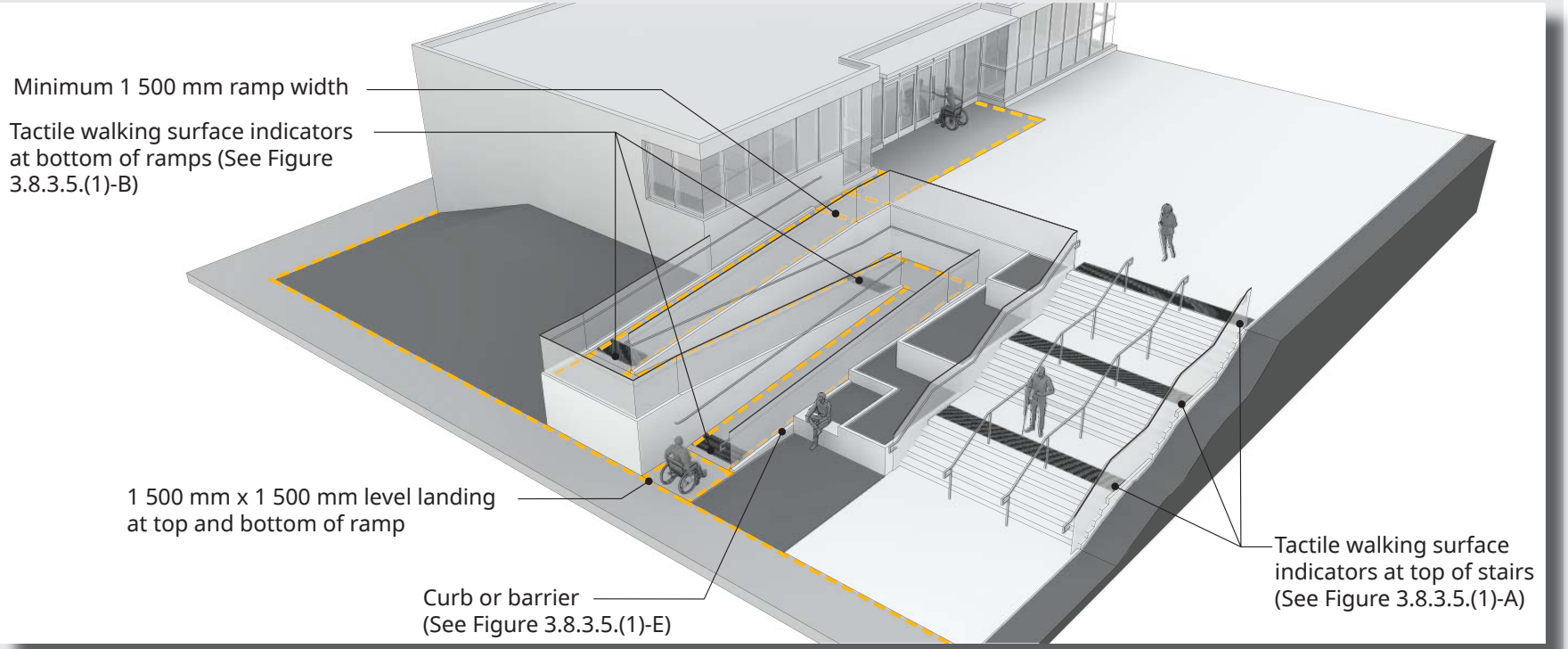

Figure 3.8.3.5.(1)-D
Stair and ramp access

Figure 3.8.3.5.(1)-D illustrates accessibility between elevations by both ramps and stairs. Tactile walking surface indicators are placed at the top of each landing and handrail extensions have been incorporated without projecting into other paths of travel.

A level landing is required at the top and bottom ends of ramps to permit people using wheelchairs to slow down or stop. Landings are necessary at changes in direction as it can be difficult to change the direction of a wheelchair or wheeled mobility device on a slope. Intermediate landings, which serve as resting points, are required at intervals not greater than 9 m along the length of the ramp.

Curved ramps should be avoided unless the radius is extremely large. It can be difficult to negotiate a turn while ascending or descending a ramp using a wheelchair. Landings, not curves, are required where ramps change direction.

When there is a vertical drop at the side of the ramp, the edge of the ramp must be protected. A 75 mm high curb, or other barrier that extends down to 100 mm from the surface is to prevent a wheel from a wheelchair or wheeled mobility device from accidentally going over the edge of the ramp. Figure 3.8.3.5.(1)-E shows different options for edge protection of ramps.

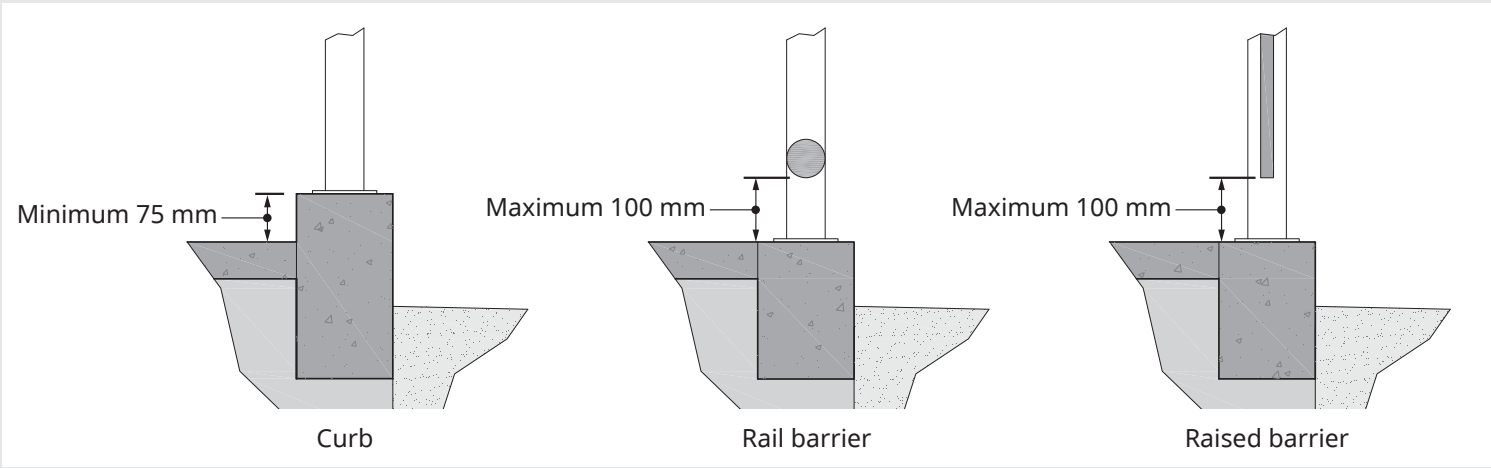

Figure 3.8.3.5.(1)-E
Edge protection of ramps

3.8.3.6. Doorways and Doors

Intent: To state the application of Article 3.8.3.6.

1) Except where stated otherwise, this Article applies to swinging and sliding doors.

2) Every doorway that is located in an *accessible* path of travel shall have a clear width not less than 850 mm

a) for swinging doors, when measured from the face of the active leaf, in the open position of 90° to the doorway, to the outside edge of the stop on the door frame, and

b) for sliding doors, when measured from the edge of the door, in the open position, to the outside edge of the stop on the door frame.

(See Note A-3.8.3.6.(2).)

Attributions [F73-OA1]

Intent: To exempt doorways from the minimum width requirements stated in Sentence 3.8.3.2.(1) and permit a lesser minimum width, on the basis that doorways comprise a small portion of a pathway. This is to limit the probability that people using a manual wheelchair or other manual mobility assistance device will not be able to circulate within a building without the assistance of another person.

A-3.8.3.6.(2) Doorway Width. Standard wheelchair width specifications indicate a range of sizes from 584 mm overall to 685 mm overall. Every doorway that is located in an *accessible* path of travel must have a clear width of not less than 850 mm when the door is in the open position and therefore it is important that this dimension be measured correctly. Figure A-3.8.3.6.(2) shows a door opened to 90°. It is clear that

the door, and to a lesser extent the stop, impinges on the space within the door frame. The clear width of not less than 850 mm is measured from the face of the door in the open position of 90° to the doorway to the outside edge of the stop on the door frame. It is not sufficient just to measure the inside width of the door frame. The hardware selected on sliding doors, such as d-shaped handles, may result in a clear width being substantially less than the inside dimension of the door frame. The clear width for sliding doors is measured from the edge of the open door to the outside edge of the stop on the door frame. Other factors, including location of door stops other than on the door frame, and the installation of door closers and exit devices, should be taken into account. The intrusion of a door handle or an exit device into the space is of lesser importance because its height above the floor does not typically obstruct passage of a wheelchair. It is recognized that there are many types of door frame and door mounts but the overall objective is to maintain a clear width of not less than 850 mm. Figure A-3.8.3.6.(2) depicts a somewhat restrictive scenario, as many doors can open wider than 90°, however, a door smaller than 914 mm would not likely be wide enough to ensure the minimum clear width of 850 mm that is required. Swing of a door beyond 90° may be of less benefit as extended reach to close the door may be required once the doorway is passed through.

In a doorway with multiple swinging leaves, the active leaf must be capable of providing the required clear width in the open position. The clear width is then measured from the face of the active leaf, in the open position of 90° to the doorway, to the outside edge of the adjacent leaf when the adjacent leaf is in the closed position.

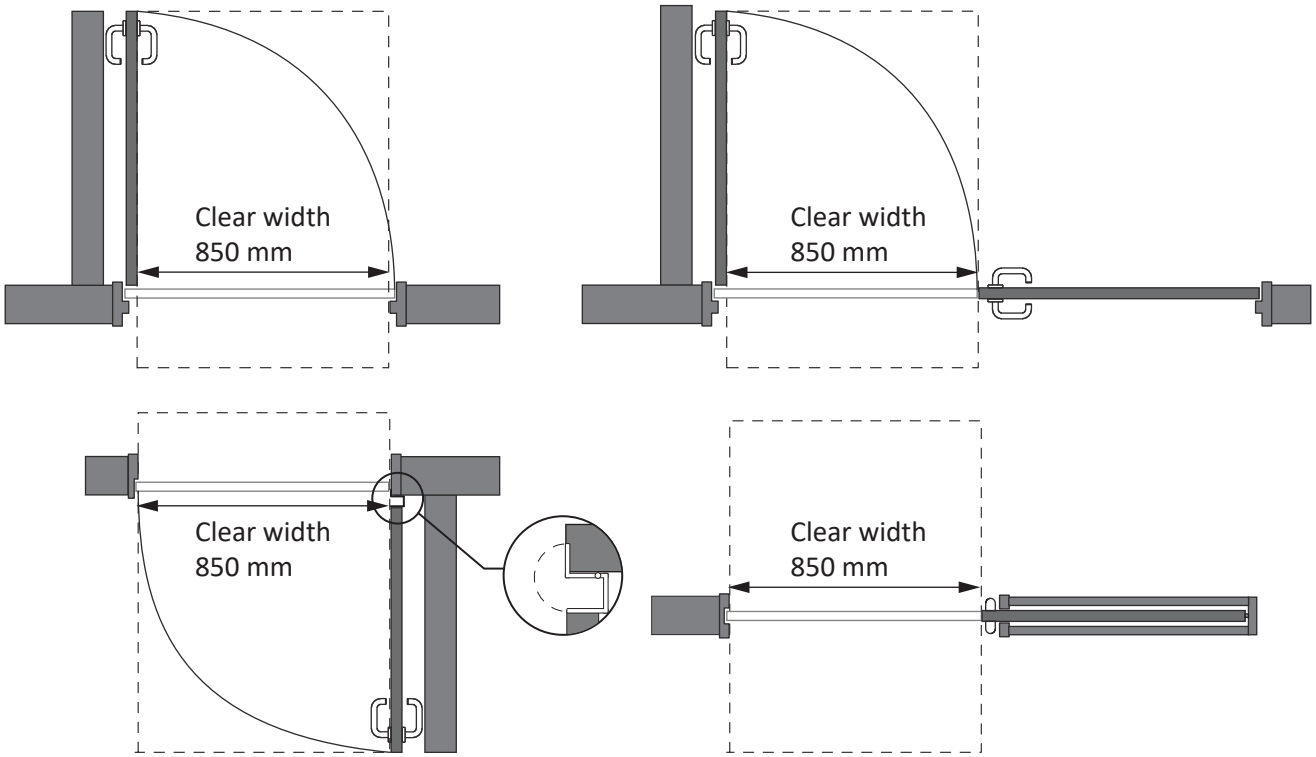

Figure A-3.8.3.6.(2)
Clear doorway width

Sentence (2) establishes the measuring criteria for clear width of doors. Door width requirements found elsewhere in the Code refer to Sentence (2) for measuring methods. The measuring methods allow for handles and other operating hardware to project from the face of the door without requiring reduction in the clear width.

The use of sliding doors in areas that are accessible is an efficient way to reduce the maneuvering space required at doors.

3) Doorways in an *accessible* path of travel to at least one bathroom within an *accessible suite* of *residential occupancy* shall have a clear width not less than 810 mm when measured in accordance with Clauses (2)(a) and (b). (See Article 3.8.2.12. and Note A-3.8.3.6.(3).)

Attributions [F74-OA2]

Intent: To limit the probability that people using a manual wheelchair or other manual mobility assistance device will not be able to access a bathroom without the assistance of another person.

A-3.8.3.6.(3) Washrooms in Residential Occupancies. This requirement ensures that the doorway to the washroom in a dwelling unit or a hotel or motel suite is at least large enough to accommodate someone using a wheelchair. The Code does not require these washrooms to be accessible, in order to avoid a set of prescriptive requirements which could limit design flexibility. However, it is relatively simple to make washrooms accessible through careful planning and positioning of fixtures and this can be achieved in an area not much larger than that of conventional washrooms.

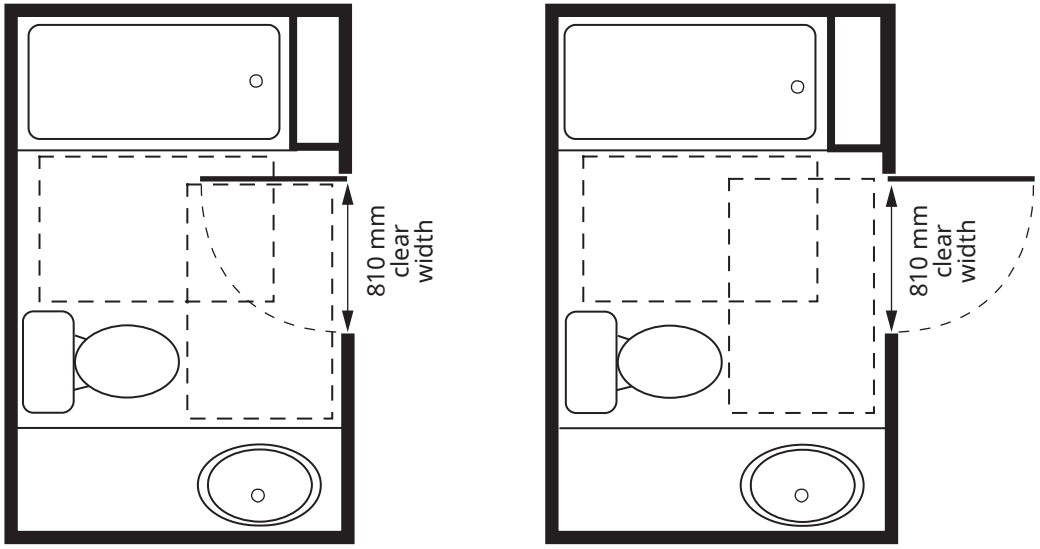

Figure A-3.8.3.6.(3)
Residential washrooms

4) Door-operating devices shall be graspable and operable

a) in accordance with Clause 3.8.3.8.(1)(c), and

b) be operable at a height between 900 mm and 1 100 mm above the floor.

(See also Sentence 3.3.1.13.(4) regarding door release operation.)

(See Note A-3.8.3.6.(4).)

A-3.8.3.6.(4) Lever Handles. Lever handles are usable by most persons with limited hand mobility and will meet the intent of this requirement. Lever handles with an end return towards the door are less prone to catch the clothing of someone passing through the doorway. Large D-shaped handles should be used on sliding doors.

For people with hand or wrist disabilities, door knobs do not provide for an adequate grip and can be difficult to operate. Push-pull hardware is acceptable. However, D-shaped lever-type handles are more accessible.

Attributions [F74-OA2]

Intent: To limit the probability that people using a manual wheelchair or with limited physical strength and/or manual dexterity, or having joint mobility restrictions, will not be able to open a door without the assistance of another person.

Attributions [F10-OS3.7]

Intent: To limit the probability that people using a manual wheelchair or with limited physical strength and/or manual dexterity, or having joint mobility limitations, will not be able to operate an egress door during an emergency, which could lead to delays in evacuating or moving to a safe place, which could lead to harm.

5) A threshold for a doorway referred to in Sentences (2) and (3) shall conform to Sentence 3.3.1.13.(11).

The maximum height and bevel requirements for thresholds apply to thresholds at doorways. Thresholds at doorways can be particularly inconvenient if complex maneuvering is required to open the door (especially a door equipped with a closer) and negotiate a wheelchair, stroller or other objects over a threshold. Figure 3.8.3.2.(2)-A includes an example of a threshold.

Attributions [F74-OA2]

Intent: To limit the probability that people using a manual wheelchair or other manual mobility assistance device will be impeded in accessing bathrooms or other areas in a building without the assistance of another person.

Attributions [F10,F30-OS3.1,OS3.7]

Intent: To limit the probability that people using a manual wheelchair or other manual mobility assistance device will be impeded in egressing during an emergency, which could lead to delays in evacuating or moving to a safe place, which could lead to harm.

6) Power operated doors required by Sentence 3.8.2.7.(1) shall

a) have operators that activate automatically or through the use of controls that

i) are located in an *accessible* path of travel,

ii) are marked with the International Symbol of Access,

iii) are located clear of the door swing and not less than 600 mm and no more than 1 500 mm from that door swing,

iv) comply with Subclause 3.8.3.8.(1)(b),

Attributions [F73-OA1]

Intent: To limit the probability that people using a manual wheelchair or other manual mobility assistance device will not be able to use power operated doors without the assistance of another person.

v) are operable from a height between 150 mm and 300 mm as well as between 900 mm and 1 100 mm above the floor, and

vi) are operable by touching or approaching any part of their surface with a fist, arm or foot, and

Subclauses (6)(a)(v) and (vi) require foot-operated hardware. This is a new requirement in the 2018 edition of the British Columbia Building Code.

b) unless equipped with safety sensors, have operators that

i) fully open the door in not less than 3 s, and

ii) require a force not more than 65 N to stop movement of the door, and

c) have a clear and level space extending the height of the doorway and not less than 1 100 mm long by the width of the door assembly on both sides of the assembly plus the arc of the door swing on any side into which the door swings.

(See Note A-3.8.3.6.(6) and (7).)

Automatic doors operated by motion sensors are often ideal. However, power-operated doors activated by accessible controls are also acceptable. The controls must be operable with a closed fist and be reachable by standing people as well as by people using wheelchairs. The controls must be located so that the individuals using them are not in the way of the opening door.

Power-operated doors help people of all ages including small children, people with strollers, shoppers with bags or packages and people who have difficulty with manually operated doors.

The physical effort required to open or close a door should be as low as reasonably practical for people to pass through doors with ease. The higher resistance permitted for exterior doors recognizes the need for some exterior doors to close against wind forces and building pressurization. All door closures should offer little resistance to opening. The 38 Newton and 22 Newton forces are maximums.

7) A cane-detectable *guard* shall be installed on the hinged side of power-assisted doors that swing open into the path of travel. (See Note A-3.8.3.6.(6) and (7).)

Attributions [F30,F73-OS3.1]

Intent: To limit the probability that people with low vision will be hit by a power operated door that cannot be detected by a cane, which could lead to harm.

A-3.8.3.6.(6) and (7) Doors with Power Operators. Doors equipped with a power operator actuated by a pressure plate identified with the International Symbol of Access or, where security is required, by a key, card or radio transmitter, and that can otherwise be opened manually, meet the intent of the requirement. The location of these actuating devices should ensure that a wheelchair will not interfere with the operation of the door once it is actuated. Swinging doors equipped with power operators which are actuated automatically and open into passing pedestrian traffic should be provided with a guard or other device designed to prevent pedestrians from stepping in the

swing area of the door. These guards or devices should be detectable by blind persons. For example, inverted U-shaped guards should have an additional rail at a height not more than 680 mm so that it is detectable by the long cane. These doors should also have a device (mat or other sensor) on the swing side to prevent the door from opening if someone is standing in the swing area.

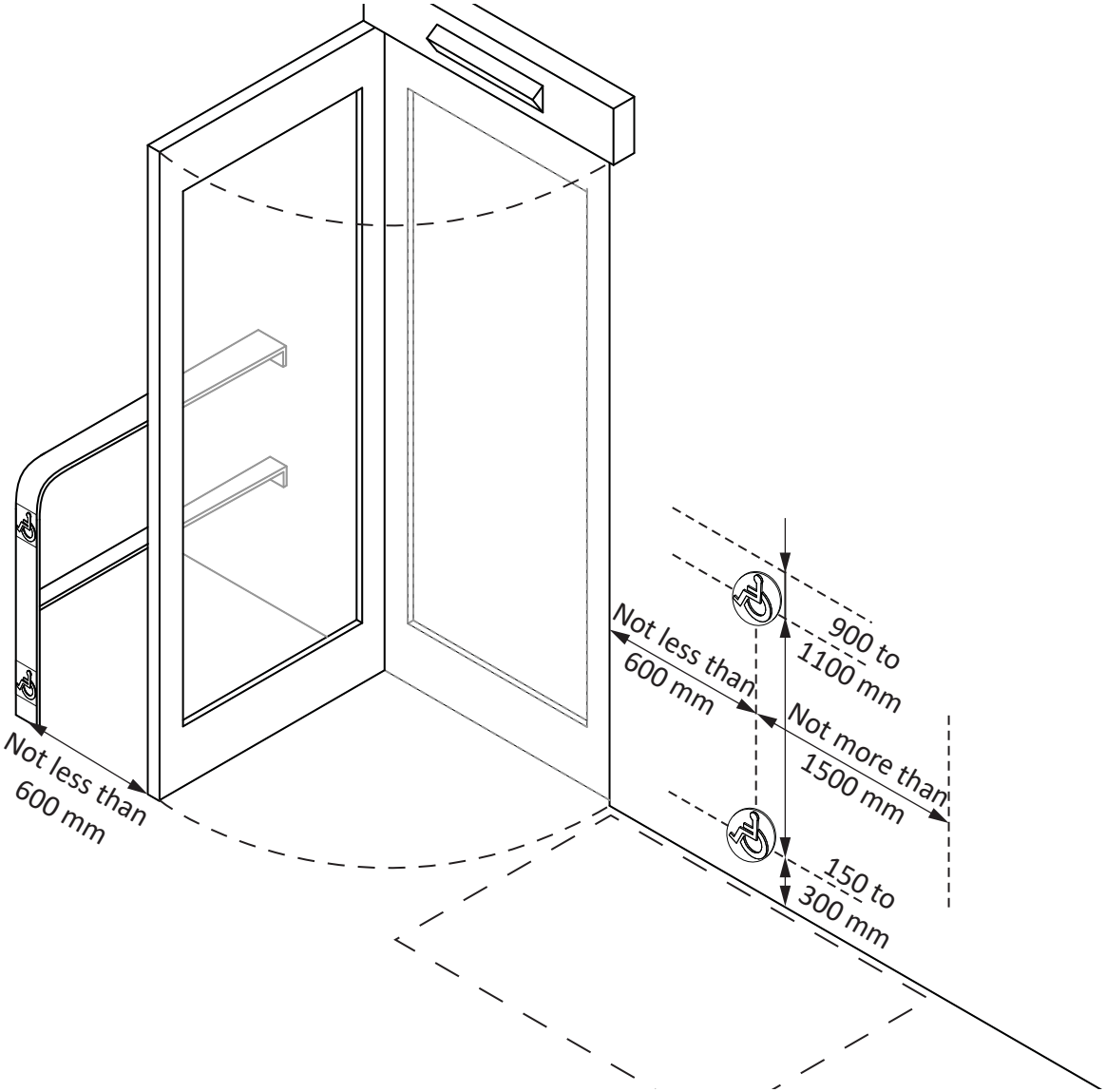

Figure A-3.8.3.6.(6) and (7)
Power operated doors

The guard located on the hinge side of a power-operated door is designed to reduce the likelihood of people in a path of travel coming into contact with an opening door is a new British Columbia Building Code requirement.

8) Except as provided in Sentence (9) and except for a door with a power door operator complying with Sentence (6), when unlatched, a door in an *accessible* path of travel shall open when the force applied to the handle, push plate or latch-releasing device is not more than

a) 38 N in the case of an exterior swinging door,

b) 22 N in the case of an interior swinging door, or

c) 22 N in the case of a sliding door.

Attributions [F73-OA1]

Intent: To limit the probability that people using a manual wheelchair or other manual mobility assistance device will not be able to open a door without the assistance of another person.

9) Sentence (8) does not apply to a door at the entrance to a *dwelling unit*, or where greater forces are required in order to close and latch the door against the prevailing difference in air pressure on opposite sides of the door. (See Note A-3.8.3.6.(9).)

Intent: To exempt certain doors from the requirements of Sentence 3.8.3.6.(8), which would otherwise limit the force needed to open the doors, on the basis that:

- people in dwelling units are familiar with the operation of their doors, and
- closers need to be able to latch doors in the closed position.

A-3.8.3.6.(9) Air Pressure Differences. Differences in air pressure on opposite sides of a door may be due to the operation of mechanical systems such as those associated with smoke control. So-called "stack action" in buildings in winter can also cause differential pressures due to the buoyancy of warm air. Stack action is usually most noticeable between stairwells and the remainder of the building, and at the entrances to buildings; the taller the building, the greater the effect. Doors with automatic closers have to operate with sufficient opening force to allow the return action to overcome the differential pressure

10) Except for a door at the entrance to a dwelling unit, a closer for a door in an *accessible* path of travel shall have a closing period of not less than 3 s measured from when the door is in an open position of 70° to the doorway, to when the door reaches a point 75 mm from the closed position, measured from the leading edge of the latch side of the door. (See Note A-3.8.3.6.(10).)

Attributions [F30-OS3.1]

Intent: To limit the probability that people using a manual wheelchair or other manual mobility assistance device will not have sufficient time to pass through a doorway without being struck by the door, which could lead to harm.

Attributions [F73-OA1]

Intent: To limit the probability that people using a manual wheelchair or other manual mobility assistance device will not have sufficient time to pass through a doorway, which could lead to people not being able to gain access to areas in a building.

Intent: To supersede the latter part of Sentence 3.8.3.6.(10) and not require a minimum closing period for closers for doors at the entrances to dwelling units, on the basis that people in dwelling units are familiar with the operation of their doors.

A-3.8.3.6.(10) Delayed Action on Door Closers. In some circumstances, closers with a delay feature which keeps the door open for several seconds before it begins to close might be desirable.

However, closers with this feature have limited back-check, a feature of a normal door closer where resistance to opening increases as the door reaches the full arc of swing. Doors equipped with a delayed action closer are therefore more susceptible to damage should the door be opened with too much force or should someone try to force it closed, thinking the closer has failed to operate. Delayed action closers are not recommended for such occupancies as schools.

Figure 3.8.3.6.(10) illustrates the method of measurement of the closing time of a door with a closer.

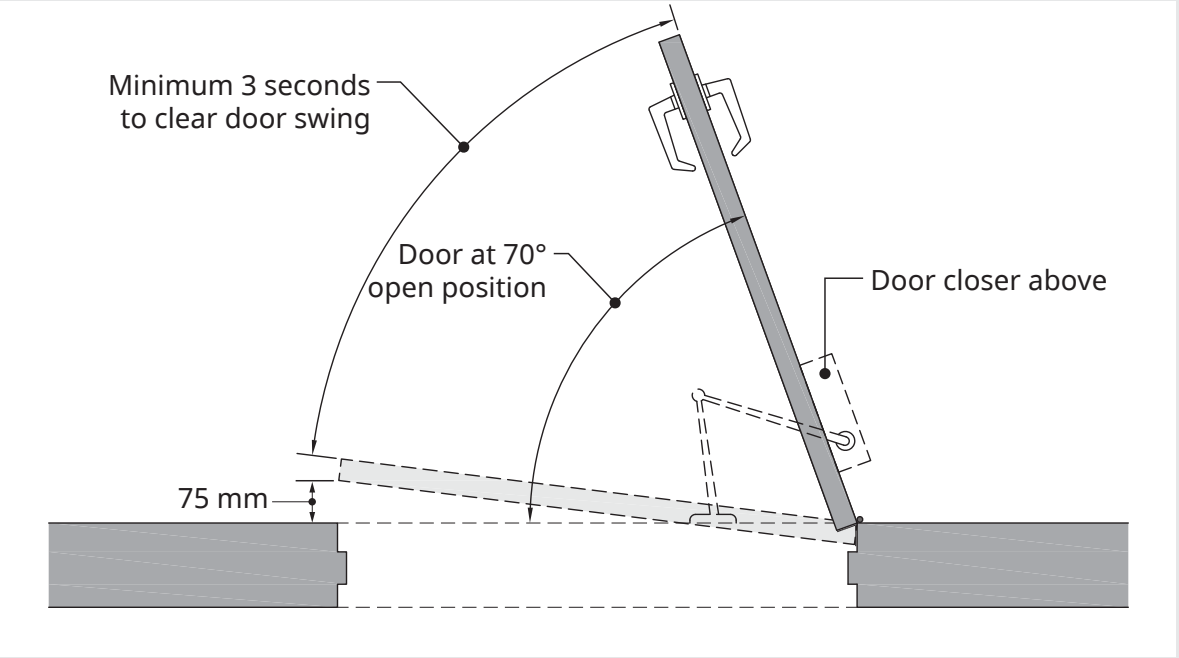

Figure 3.8.3.6.(10)
Closing time of door

11) Unless equipped with a power door operator complying with Sentence (6), a door in an *accessible* path of travel shall have a clear and level space extending the height of the doorway and not less than

a) 1 500 mm deep by the width of the door assembly plus not less than 600 mm beside the latching jamb of the door on any side of the assembly into which a swinging door swings,

b) 1 200 mm deep by the width of the door assembly plus not less than 300 mm beside the latching jamb of the door on any side of the assembly into which a swinging door does not swing,

Attributions [F73-OA1]

Intent: To limit the probability that people using a manual wheelchair or other manual mobility assistance device will not be able to operate a door opening mechanism and open a door without interference from the manual wheelchair or other manual mobility assistance device.

c) 1 200 mm deep by a width not less than 900 mm, including not less than 50 mm on the latching jamb side where the approach is perpendicular to a sliding door, and

d) 1 050 mm deep by a width not less than 1 350 mm, including not less than 540 mm on the latching jamb side where the approach is parallel to a sliding door.

(See Note A-3.8.3.6.(11).)

A-3.8.3.6.(11) Clearance at Doorways. Sufficient clearance must be provided on the latch side of doors for a user to operate the door-opening mechanism and open the door without interference from the wheelchair. This is particularly important for a door swinging towards the approach side. See Figure A-3.8.3.6.(11).

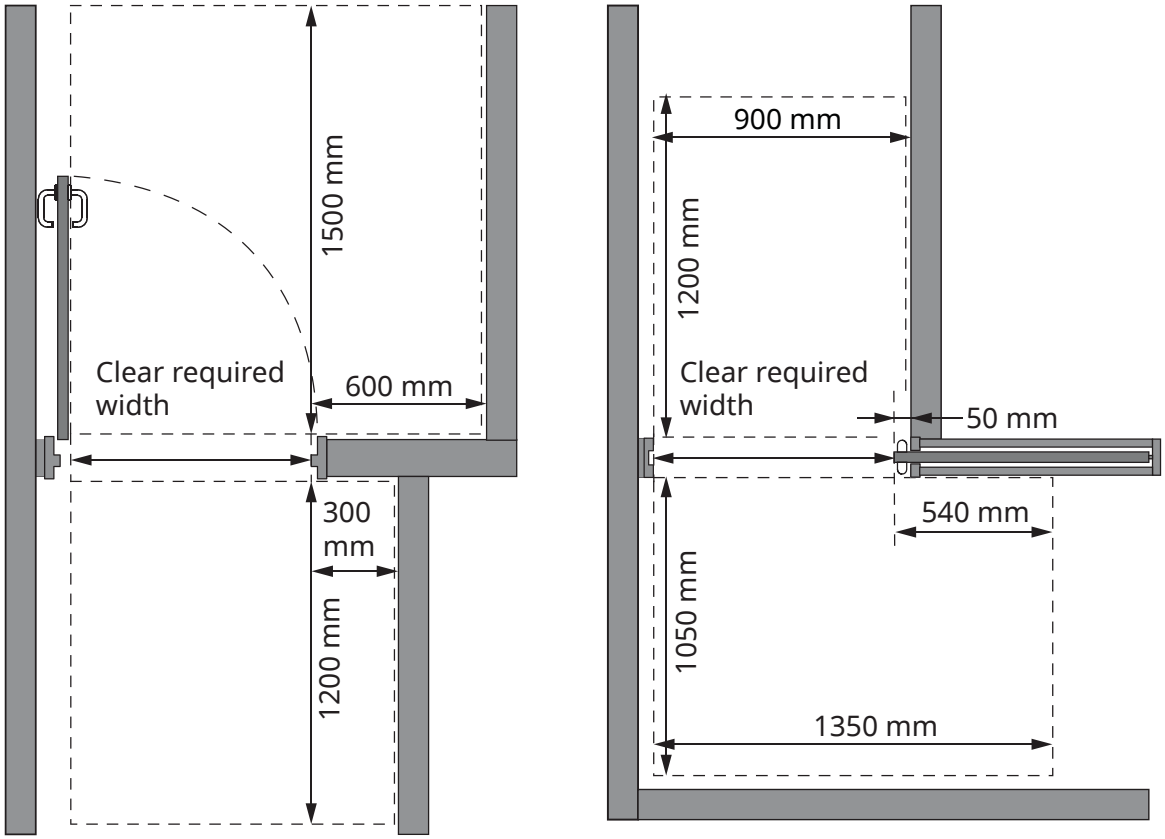

Figure A-3.8.3.6.(11)
Doorway clearance

When a door swings towards a person using a wheelchair, a clear and level space is required on the latch side of the door to allow maneuvering of the wheelchair while opening the door. A clear and level space is also required when the door swing is away from a person using a wheelchair although this side clearance requirement is less. Figure 3.8.3.6.(11) shows a person maneuvering through a series of doors.

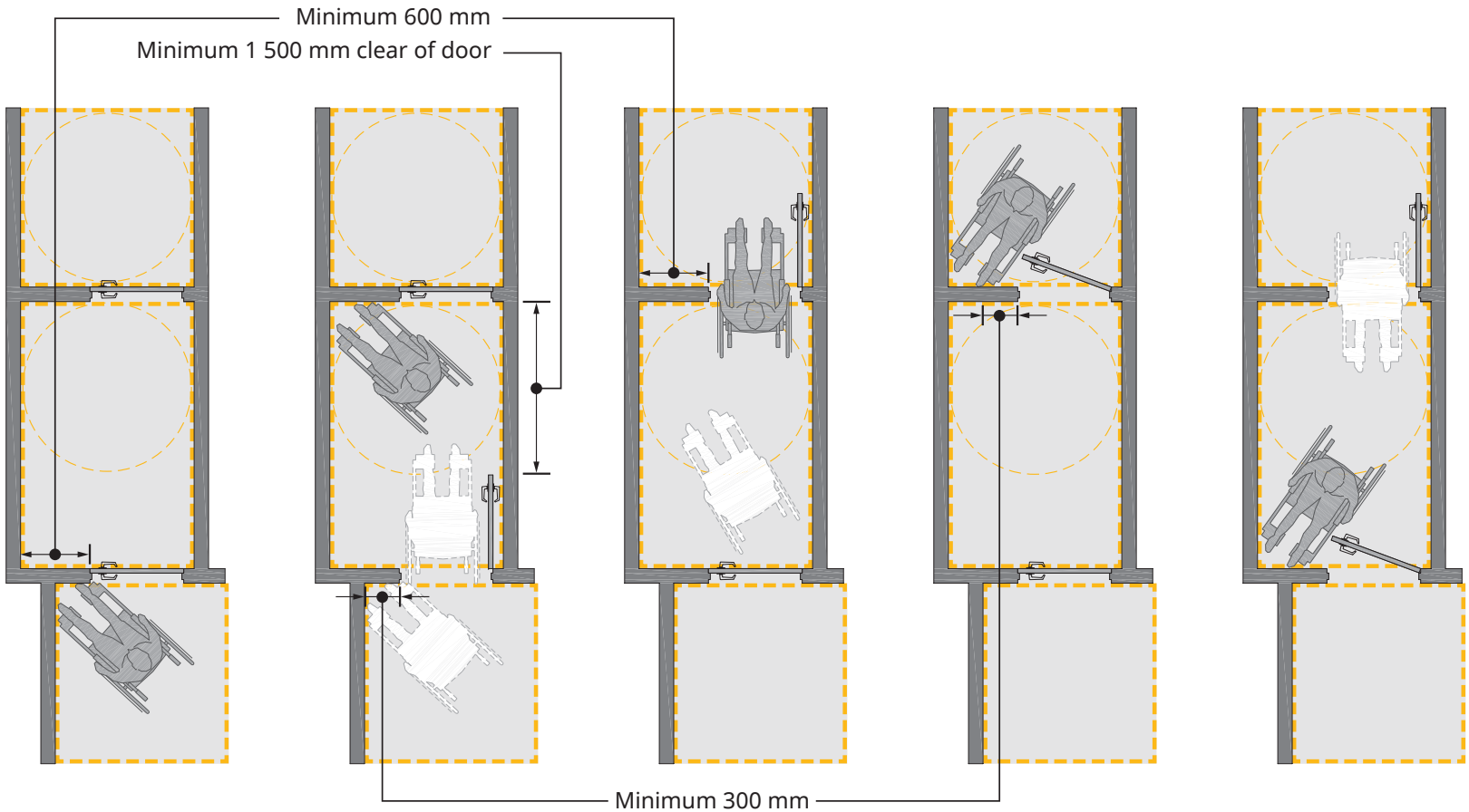

Figure 3.8.3.6.(11)
Door swing in the direction of travel

Other provisions may also apply to doors installed in series. Clauses 3.2.8.4.(1)(a) and 3.3.5.7.(4)(a) describe situations where doors installed in series must be not less than 1.8 m apart.

12) Doors in an *accessible* path of travel which are installed in series shall be separated by a distance of not less than 1 500 mm plus the width of any door that swings into the space in the path of travel from one door to another. (See also Clauses 3.2.8.4.(1)(a) and 3.3.5.7.(4)(a).)

Attributions [F30-OS3.1]

Intent: To limit the probability that people using a manual wheelchair or other manual mobility assistance device will not be able to pass through a vestibule without becoming stuck or trapped, which could lead to harm.

Attributions [F73-OA1]

Intent: To limit the probability that people using a manual wheelchair or other manual mobility assistance device will not be able to pass through a vestibule without becoming stuck or trapped.

13) Only the active leaf in a multiple-leaf door in an *accessible* path of travel need conform to the requirements of this Article.

Intent: To exempt inactive leaves in doorways with multiple leaves from the requirements of Article 3.8.3.6., on the basis that inactive leaves are intended to be used infrequently.

14) Except as provided in Clause 3.8.3.5.(1)(c), the floor surface on each side of a door in an *accessible* path of travel shall be level within a rectangular area

a) as wide as the door plus the clearance required on the latch side by Sentence (11), and

b) whose dimension perpendicular to the closed door is not less than the width of the *accessible* path of travel but need not exceed 1 500 mm.

Attributions [F73-OA1]

Intent: To limit the probability that people using a manual wheelchair or other manual mobility assistance device will not be able to rest and remain stationary while opening a door without the assistance of another person.

Intent: To limit the probability that the level area of a ramp will be of insufficient size to provide a clear width beyond the latch edge of the door, which could lead to people using a manual wheelchair or other manual mobility assistance device being unable to negotiate the device past the door without assistance.

3.8.3.7. Passenger-Elevating Devices

1) A passenger-elevating device in an *accessible* path of travel shall conform to

a) Appendix E of ASME A17.1/CSA B44, "Safety Code for Elevators and Escalators," (see also Sentence 3.5.2.1.(3)), or

b) CSA B355, "Lifts for Persons with Physical Disabilities." (See also Sentence 3.5.4.1.(3).)

Attributions [F30-OS3.1] [F10-OS3.7]

Intent: To limit the probability that passenger-elevating devices will not meet proper standards, which could lead to such devices not performing as intended in normal or emergency use situations, which could lead to harm.

Although access may be required to a storey or area of a building, not all storeys or areas of a building have to be served by a passenger elevator. The method used to provide access is at the discretion of the designer with a qualification that whichever method or methods are used must conform to the accessibility requirements. Elevating devices that are locked and require operation by someone other than the user are not helpful unless they are constantly supervised by an operator.

Article 3.5.4.1. requires that at least one elevator in each building provided with elevators be large enough to accommodate an ambulance stretcher. An elevator with a car that does not accommodate an ambulance stretcher must be secondary to an elevator with a car that does. The pointer is to remind the designer that platform lifts and limited-use / limited application elevators do not need to accommodate an ambulance stretcher.

The ASME A17.1/CSA B44, Safety Code for Elevators and Escalators includes requirements for minimum internal car dimensions to allow people using wheelchairs to enter, turn through 180° with moderate ease, and exit from the elevator. The width and depth dimensions, which are interchangeable, should not prevent other elevator car shapes from being permitted, provided it can be shown that accessibility and maneuverability for people using wheelchairs is maintained.

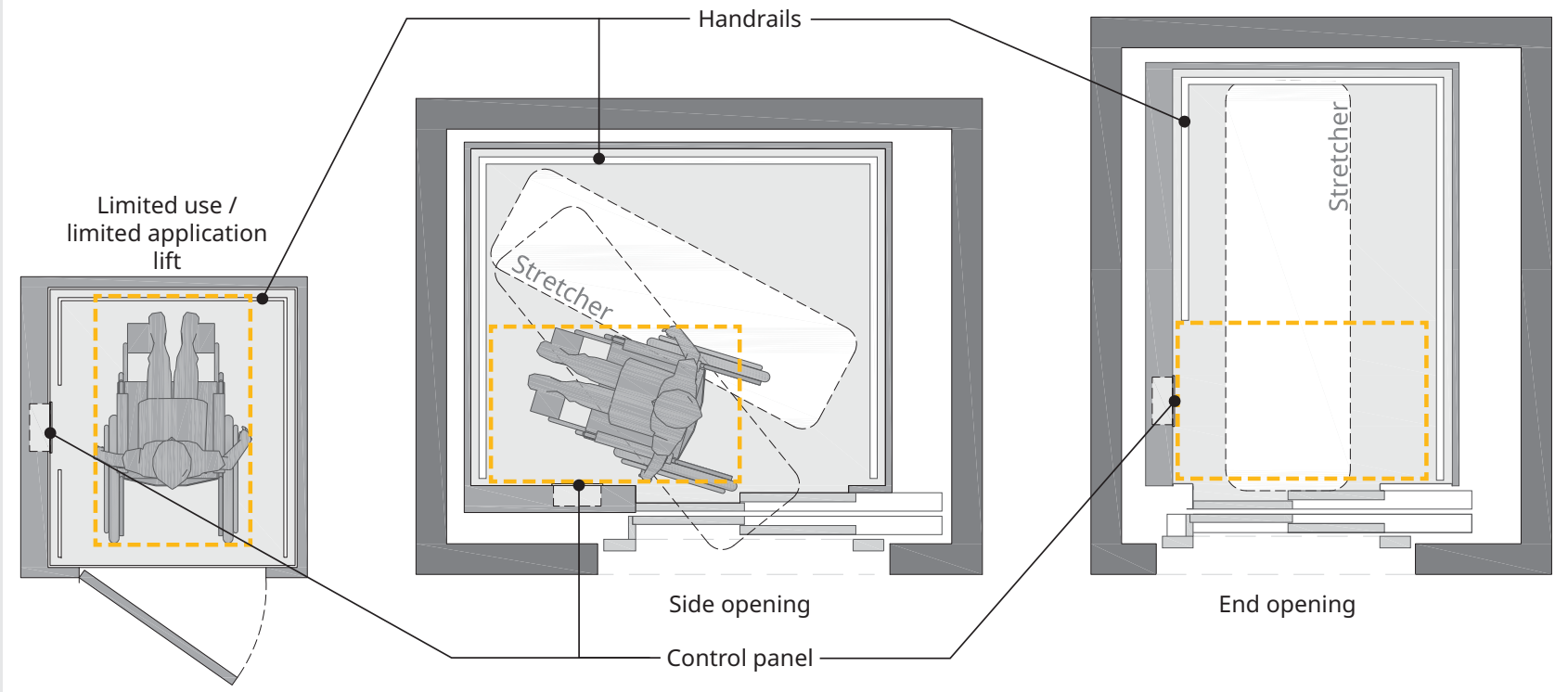

Figure 3.8.3.7.(1)-A
Elevator car size and location of controls

The location of the car operating panel is dependent on the dimension of the front return panel. Where the front return panel is less than 470 mm, the car operating panel is required to be located on the side wall of the car which is a convenient location for people using wheelchairs. When the car operating panel is located on the side wall, it is recommended that it be a minimum of 250 mm from the front return panel. When the panel is mounted on the front, it should be as far as possible from the side wall or it could be difficult to reach.

Each of the various arrangements shown in Figure 3.8.3.7.(1)-A allow people using wheelchairs to enter the elevator car and use the car operating panel.

Figure 3.8.3.7.(1)-B shows a layout of an elevator car operating panel. Although configurations other than as shown in Figure 3.8.3.7.(1)-B are acceptable, it is preferred that floor buttons always be arranged vertically to give a direct functional correlation to the direction of travel. Flush or recessed buttons should be carefully designed to be operable with a closed fist. Having a contrasting colour background for markings is not intended to restrict the material or finish of the elevator car and control panel. Some individuals cannot read Braille. However, most will be able to identify raised letters, numbers and common symbol markings, which are required for identification.

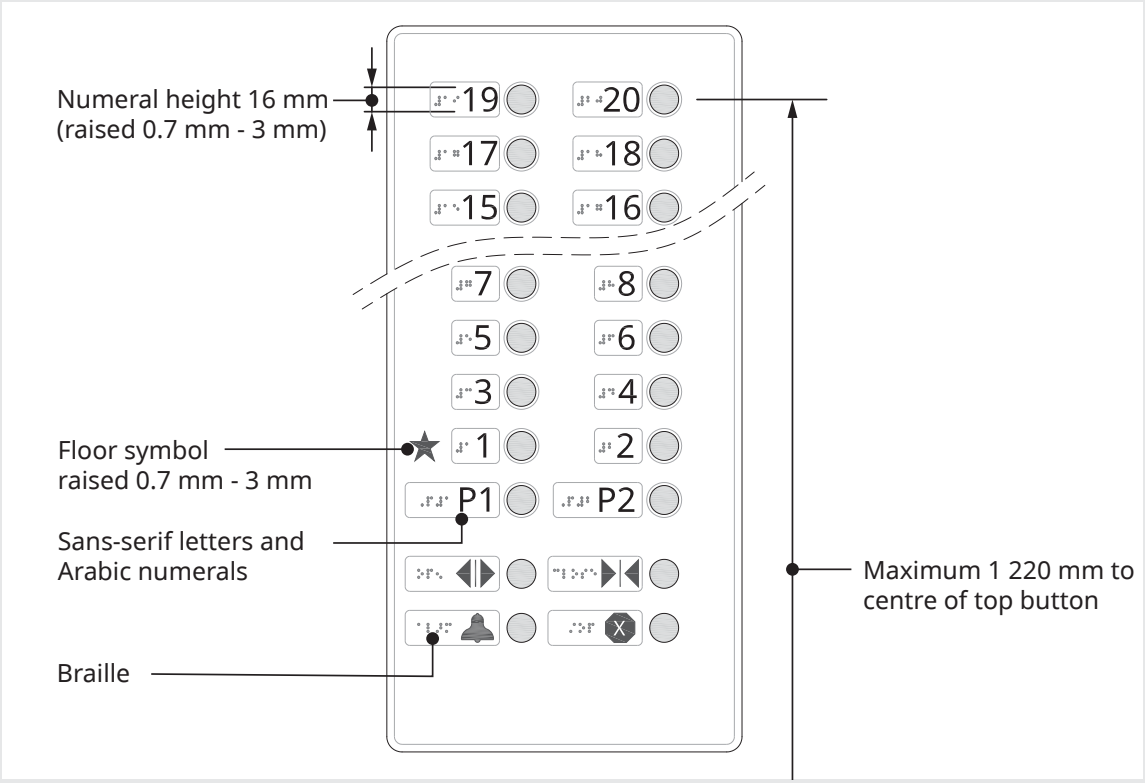

Figure 3.8.3.7.(1)-B
Elevator car operating panel

The height of controls above the car floor must comply with the requirements in Article 3.8.3.8. in addition to the requirements for height of controls in the ASME A17.1/CSA B44 standard. Emergency telephone cabinets must also be mounted at an accessible height.

It is recommended to provide graspable handrails in elevator cars so that users can stabilize themselves.

Figures 3.8.3.7.(1)-A and 3.8.3.7.(1)-C illustrate acceptable elevator car designs but do not prevent other designs, systems, and technological developments from being permitted. For example, the illustrations show side-opening doors, but centre-opening doors are also acceptable. Car shapes other than those shown may also be permitted.

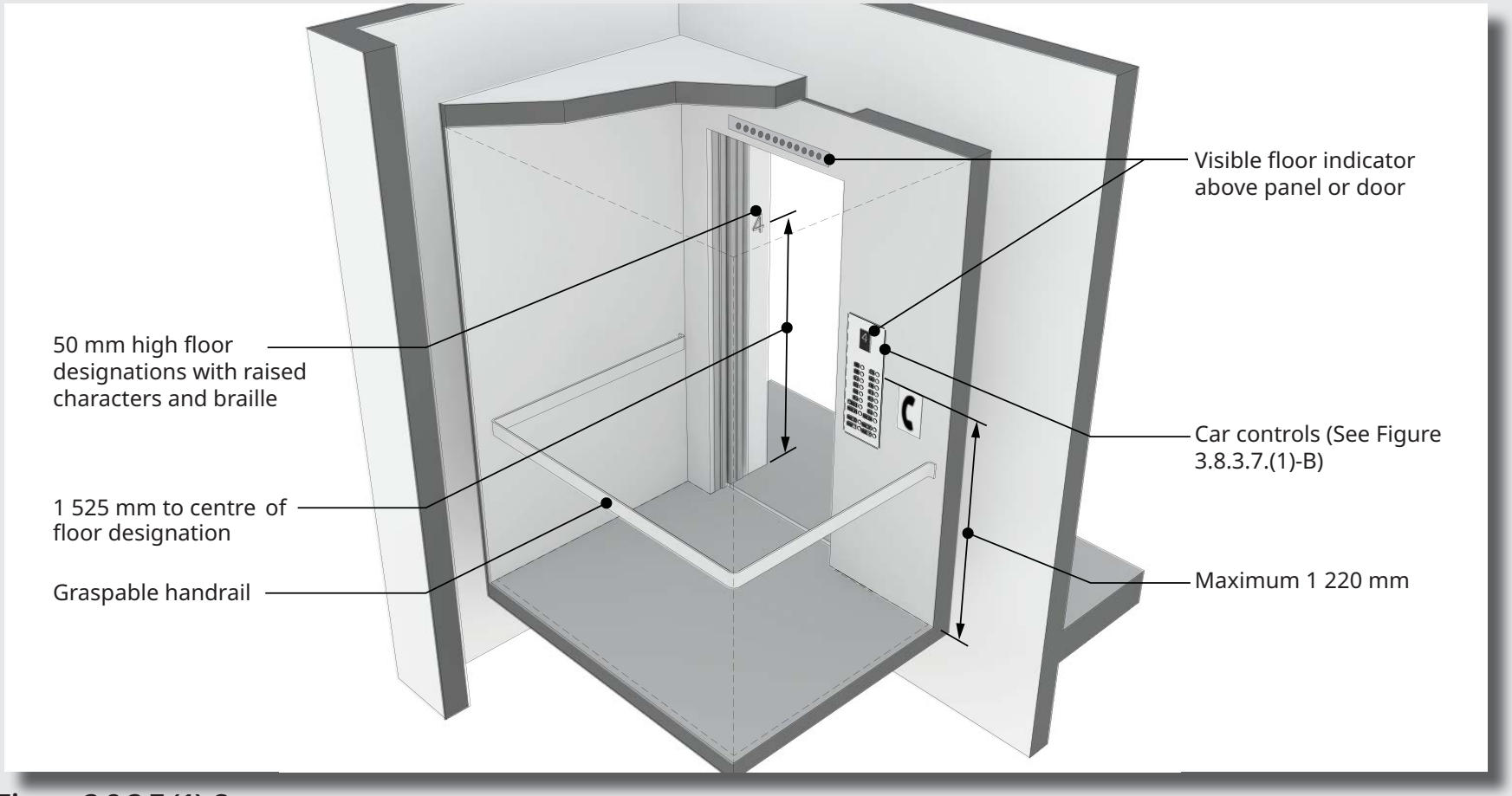

Figure 3.8.3.7.(1)-C
Elevator car controls

3.8.3.8. Controls and Outlets

1) Controls described in this Section shall

a) be mounted 455 mm to 1 200 mm above the floor,

b) be adjacent to and centred on either the length or the width of a clear floor space of 1 350 mm by 800 mm, and

c) be operable

i) with one hand in a closed fist position, without requiring tight grasping, pinching with fingers, or twisting of the wrist, and

ii) unless otherwise stated, with a force not more than 22 N.

Attributions [F74-OA2]

Intent: To limit the probability that people using a manual wheelchair or other manual mobility assistance device, or with limited physical strength or manual dexterity, or joint mobility, will not be able to operate essential building controls without assistance.

Attributions [F10-OS3.7]

Intent: To limit the probability that people using a manual wheelchair or other manual mobility assistance device, or with limited physical strength or manual dexterity, or joint mobility, will not be able to operate the controls for building services or a fire alarm pull station or other safety device in an emergency situation, which could lead to delays in the operation of such controls and devices, which could lead to harm.

2) Electrical outlets described in this Section shall be located in conformance with Clause (1)(a). (See Note A-3.8.2.6.(2).)

Attributions [F74-OA2]

This common control criteria supports operation by people who have difficulty grasping objects. A new requirement prohibits the installation of controls in confined locations such as in a space formed by two walls that would limit the accessibility for someone who uses a wheelchair.

Controls are to be useable by all and operable by a closed fist with limited force. Like controls, electrical outlets that are intended for occupant use are to be located not less than 455 mm above the floor.

3.8.3.9. Signs and Indicators

1) Signs required by Article 3.8.2.10. shall incorporate the International Symbol of Access or the International Symbol of Access for Hearing Loss and appropriate graphical or textual information that clearly indicates the type of facilities available. (See Note A-3.8.3.9.(1).)

Attributions [F74-OA2]

Intent: To limit the probability that people who are deaf or hard of hearing will not be able to identify or locate equipment that responds to their needs without the assistance of another person.

Attributions [F73-OA1]

Intent: To limit the probability that people using a manual wheelchair or other manual mobility assistance device will not be able to identify or locate an accessible entrance without the assistance of another person.

Intent: To limit the probability that people using a manual wheelchair or other manual mobility assistance device will not be able to identify or locate accessible washroom facilities without the assistance of another person.

A-3.8.3.9.(1) Accessibility Signs. The International Symbol of Access shown in Figure A-3.8.3.9.(1)-A indicates to persons with physical disabilities that they will have reasonable freedom of movement within a building so signed. The symbol is usually white on a blue background; where these colours do not stand out, the sign can be set on a white background. An arrow can be added to indicate direction or the location of an accessible space or facility.

Figure A-3.8.3.9.(1)-A
Signs indicating accessible facilities

The International Symbol of Access for Hearing Loss shown in Figure A-3.8.3.9.(1)-B, which indicates accessibility for persons who are deaf or hard of hearing, should be used to indicate the availability of variable volume controls on telephones, assistive listening systems, and text telephones (TT). These latter devices may also be referred to as teletypewriters (TTY) or telecommunications devices for the deaf (TDD).

Figure A-3.8.3.9.(1)-B
Signs for assistive listening facilities

When characters are used on signs to indicate accessible features, Arabic numerals and sans-serif letters with a stroke width to height ratio from 1 in 6 to 1 in 10 and a character width to height ratio from 3 in 5 to 1 in 1 should be used. Characters identifying doors and openings that lead from public areas and through which the public is permitted to pass should consist of Arabic numerals or sans-serif letters or both, be not less than 25 mm high and raised between 0.7 mm and 3 mm with a stroke to height ratio for ease of reading by touch. This identification should be located at the side of the doors or openings, centred 1 350 mm above the finished floor and within 150 mm of the jamb.

2) Signs required by Sentence (1) shall

a) be located so as to be easily read and understood,

b) be located so as to be seen by a person using a wheelchair,

c) be located so as to avoid shadow areas and surface glare, and

d) have characters and symbols in colours that contrast highly with their backgrounds.

Attributions [F10-OS3.7]
Attributions [F73-OA1]
Attributions [F74-OA2]

3) Where provided, tactile walking surface indicators shall

a) be slip-resistant,

b) be durable,

c) be not more than 3 mm above or below the surrounding surface,

d) be detectable when walked upon, as being different from the surrounding surface,

e) be in a contrasting colour to the surrounding surface,

f) when provided at stairs,

i) be located one tread width back from the top riser, and

ii) measure 600 mm to 650 mm by the full width of the stair, and

g) when provided on ramps or platforms,

i) be located 150 mm to 200 mm back from the lower end of the ramp or edge of platform, and

ii) measure 600 mm to 650 mm by the full width of the ramp or platform, but not including flared sides of the ramp.

(See Note A-3.8.3.9.(3).)

Attributions [F30-OS3.1]
Attributions [F73-OA1]

A-3.8.3.9.(3) Tactile Walking Surface Indicators. Figure 3.8.3.9.(3) illustrates acceptable designs of tactile walking surface indicators.

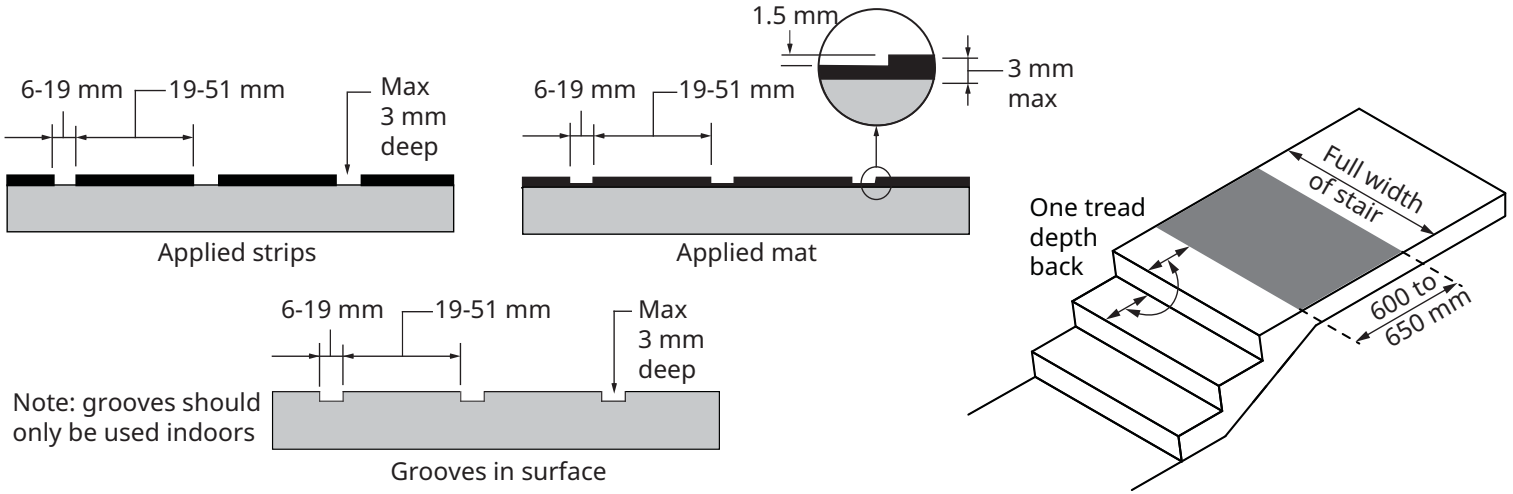

Figure A-3.8.3.9.(3)
Tactile walking surface indicators

Suitable character dimensions when used with a matte finish and a high contrast of 85 to 95 percent between the colour of the characters and their background make generally readable signs. Good choices of colours which provide high contrast are [1] blue or black backgrounds with white letters, and [2] yellow backgrounds with black letters.

Figure 3.8.3.9.-A illustrates character proportion and contrast between characters and their background.

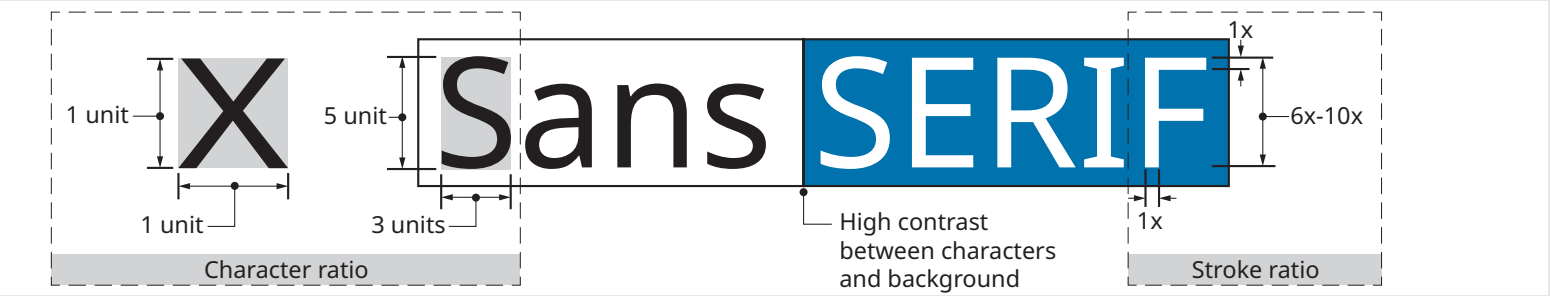

Figure 3.8.3.9.-A

Sign Characteristics

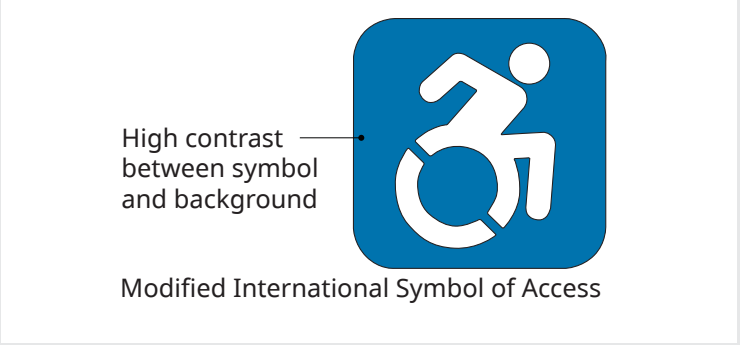

Figure 3.8.3.9.-B
Modified International Symbol of Access

There are no copyright restraints on the modified International Symbol of Access shown in Figure 3.8.3.9.-B.

Wording used on a sign should be concise. Directional guidance should be restricted to one instruction per sign to avoid confusion. Directional symbols, such as arrows, should be clear and sharp and not stylized.

Symbols are being increasingly used to assist people in a particular environment. Figure 3.8.3.9.-C illustrates a few examples of such symbols with the incorporation of the Modified International Symbol of Access.

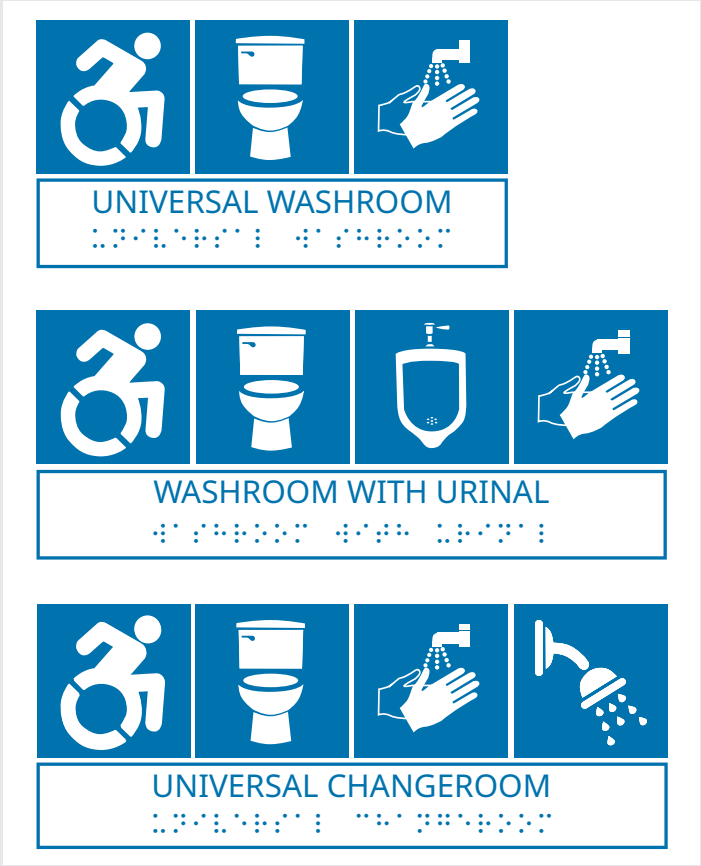

Figure 3.8.3.9.-C
Examples of Signs

Parking stalls should be clearly identified by signs mounted 1500 mm above the ground to make them easy to identify as shown in Figure 3.8.2.5. Painting the International Symbol of Access on the surface (approximately 1 m square) helps to discourage misuse of the parking stall but, as it can be hidden by dirt and snow when outdoors, this should only be used in addition to the raised sign. Signs should be located at the entrance(s) to parking structures to indicate on what levels and/or in what areas the accessible parking stalls are located.

3.8.3.10. Drinking Fountains

Attributions [F74-OA2]

Intent: To limit the probability that people using a manual wheelchair or other manual mobility assistance device will not be able to make use of a drinking fountain without the assistance of another person.

1) Drinking fountains required by Sentence 3.8.2.8.(9) shall

a) be located along an *accessible* path of travel,

b) have a minimum clear floor space of 800 mm by 1 350 mm in front of it,

c) where it has frontal access, provide a knee clearance in accordance with Clause 3.8.3.15.(1)(d),

d) have a spout that

i) is located near the front of the unit, at a height between 750 mm and 915 mm above the floor, and

ii) directs water flow in a trajectory that is nearly parallel to the front of the unit, at a height not less than 100 mm, and

e) be equipped with controls that

i) activate automatically, or

ii) are located either on the front or on both sides of it and comply with Clause 3.8.3.8.(1)(c).

Figure 3.8.3.10. illustrates a surface-mounted drinking fountain with bottle fill station.

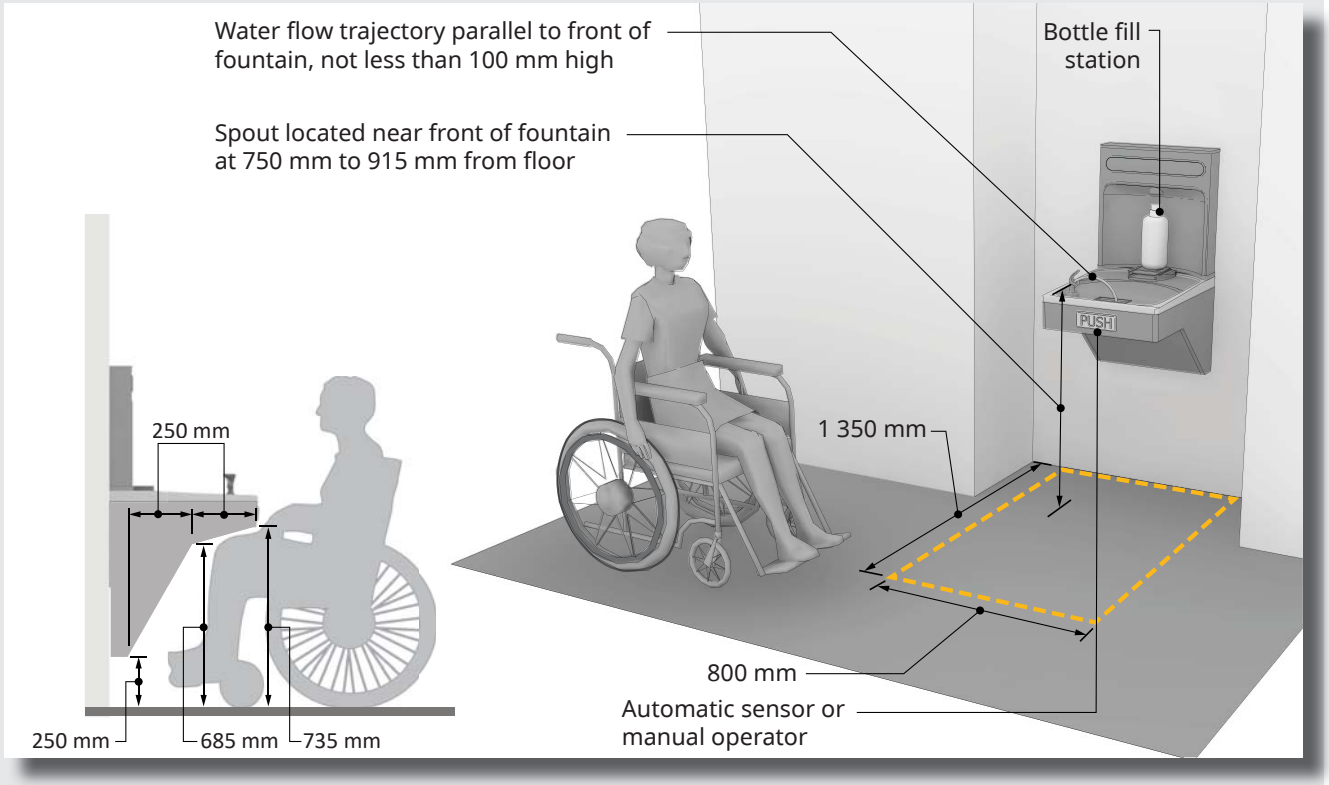

Figure 3.8.3.10.
Drinking Fountain and Bottle Filling Station

3.8.3.11. Water-Closet Stalls

1) Water-closet stalls and enclosures required by Sentence 3.8.2.8.(5) shall

a) be not less than 1 500 mm wide by 1 500 mm deep,

b) have a clear floor space of not less than 1 500 mm by 1 500 mm in front of the accessible stall,

c) be equipped with a door that

i) can be latched from the inside with a mechanism conforming to Clause 3.8.3.8.(1)(c),

ii) is aligned with either the transfer space adjacent to the water closet or with a clear floor space not less than 1 500 mm by 1 500 mm within the stall,

iii) provides a clear opening not less than 850 mm wide when measured in accordance with Clauses 3.8.3.6.(2)(a) and (b),

iv) is self-closing so that, when at rest, the door is ajar by not more than 50 mm beyond the jamb,

v) swings outward, unless there is a clear floor space within the stall of at least 800 mm by 1 350 mm plus the arc of the door swing (See Note A-3.8.3.11.(1)(c)(v)),

A-3.8.3.11.(1)(c)(v) Water-closet Stalls. Doors to water-closet stalls for persons with physical disabilities should swing outward, preferably against a side wall.

Attributions [F74-OA2]

Intent: To limit the probability that people using a manual wheelchair or other manual mobility assistance device will not be able to access and use an accessible washroom without the assistance of another person.

Attributions [F72-OH2.1]

Intent: To limit the probability that people using a manual wheelchair or other manual mobility assistance device will not be able to use a water closet without the assistance of another person, which could lead to unsanitary conditions, which could lead to harm.

Attributions (c)(i) [F74-OA2]

Intent: To limit the probability that people will not be able to secure a water-closet stall or enclosure, which could lead to inconvenience in using the facility.

Attributions (e) and (f) [F30,F20-OS3.1]

Intent: To limit the probability that the absence of grab bars will lead to a person slipping or falling, which could lead to harm.

Intent: To direct Code users to Article 3.7.2.8. for the design of grab bars.

Attributions (g) [F30-OS3.1] Applies to portion of Code text: "... be equipped with a coat hook ... projecting not more than 50 mm from the wall ..."

Intent: To limit the probability that a coat hook will project excessively into the stall or enclosure space, which could lead to people being hit by the coat hook, which could lead to harm.

Intent: To allow proper usage by people using a manual wheelchair or other manual mobility assistance device.

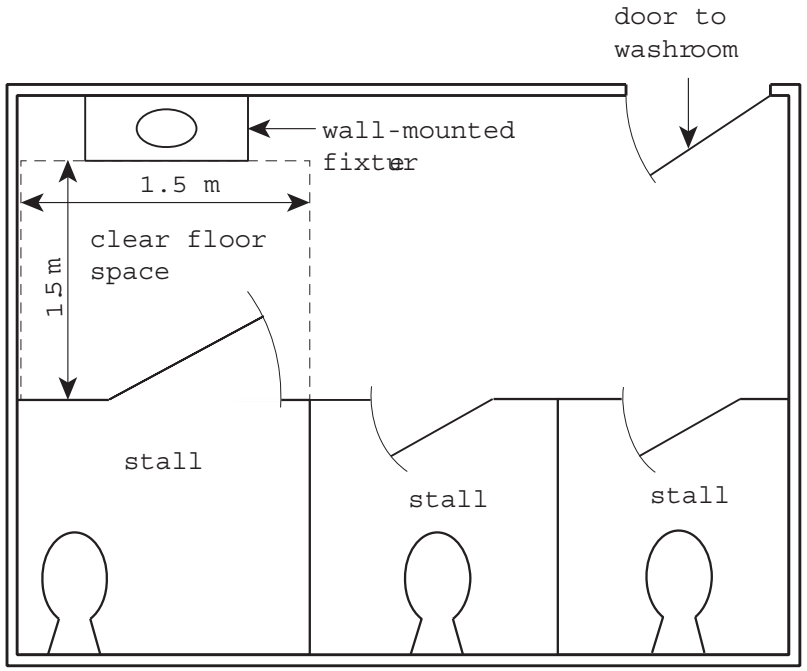

Figure A-3.8.3.11.(1)(c)(v)
Water-closet stalls

vi) where the door swings outward, is provided with a horizontal, D-shaped, visually contrasting door pull not less than 140 mm long located on the inside such that its midpoint is 200 mm to 300 mm from the hinged side of the door and 900 mm to 1 100 mm above the floor (See Note A-3.8.3.11.(1)(c)(vi)), and

A-3.8.3.11.(1)(c)(vi) Door Pulls. The door pull should consist of a D-shaped handle mounted horizontally. The centre lines are the lines drawn through the long axis and the short axis of the handle. The midpoint of the handle must be located horizontally at 200 to 300 mm from the hinged side of the door and vertically at 900 to 1 100 mm above the finished floor surface.

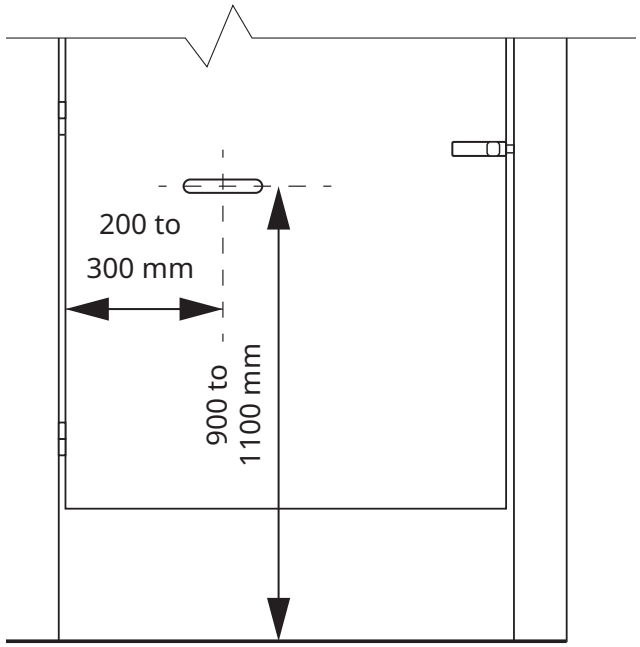

Figure A-3.8.3.11.(1)(c)(vi)-A
Door pull location

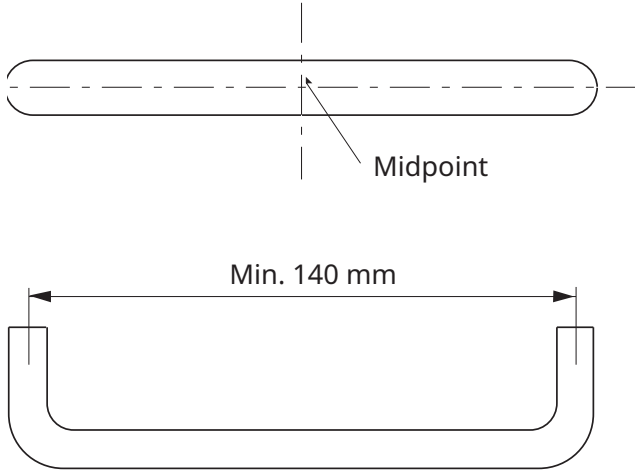

Figure A-3.8.3.11.(1)(c)(vi)-B
Door pull details

vii) is provided with a horizontal, D-shaped, visually contrasting door pull not less than 140 mm long located on the outside such that its midpoint is 120 mm to 220 mm from the latch side and 900 mm to 1 100 mm above the floor,

d) have a water closet located so that the distance between the centre line of the fixture and the wall on one side is 460 mm to 480 mm,

e) be equipped with an L-shaped grab bar that

i) is mounted on the side wall closest to the water closet,

ii) has horizontal and vertical components not less than 760 mm long mounted with the horizontal component 750 mm to 850 mm above the floor and the vertical component 150 mm in front of the water closet (See Note A-3.8.3.11.(1)(e)(ii)), and

A-3.8.3.11.(1)(e)(ii) Additional Grab Bars. It is the designer's prerogative to exceed the minimum requirements found in the British Columbia Building Code and specify the installation of additional grab bars in other locations. These additional grab bars may be of different configurations and can be installed in other orientations.

iii) complies with Article 3.7.2.8.,

f) be equipped with either one grab bar at least 600 mm long and centred over the water closet, or two grab bars at least 300 mm long and located either side of the flush valve, that

i) conform to Article 3.7.2.8.,

ii) are mounted on the rear wall, and

iii) are mounted at the same height as the grab bar on the side wall or 100 mm above the top of the attached water tank, if applicable,

g) be equipped with a coat hook mounted not more than 1 200 mm above the floor on a side wall and projecting not more than 50 mm from the wall, and

h) be equipped with a toilet paper dispenser mounted on the side wall closest to the water closet such that

i) the bottom of the dispenser is 600 mm to 800 mm above the floor, and

ii) the closest edge of the dispenser is not more than 300 mm from the front of the water closet.

Accessible washrooms allow people with disabilities to enter and use the washroom facilities. Doors that are too narrow or have a second door, privacy screen or wall in proximity can create an inaccessible washroom. Where possible, eliminate washroom entrance doors altogether and only use doors in succession when there is no alternative. Privacy screens must not impinge upon individuals' ability to maneuver around them.

Within a washroom, enough space is required to allow people using wheelchairs to move freely to and from various accessible fixtures. Figure 3.8.3.11.-A shows an acceptable washroom layout.

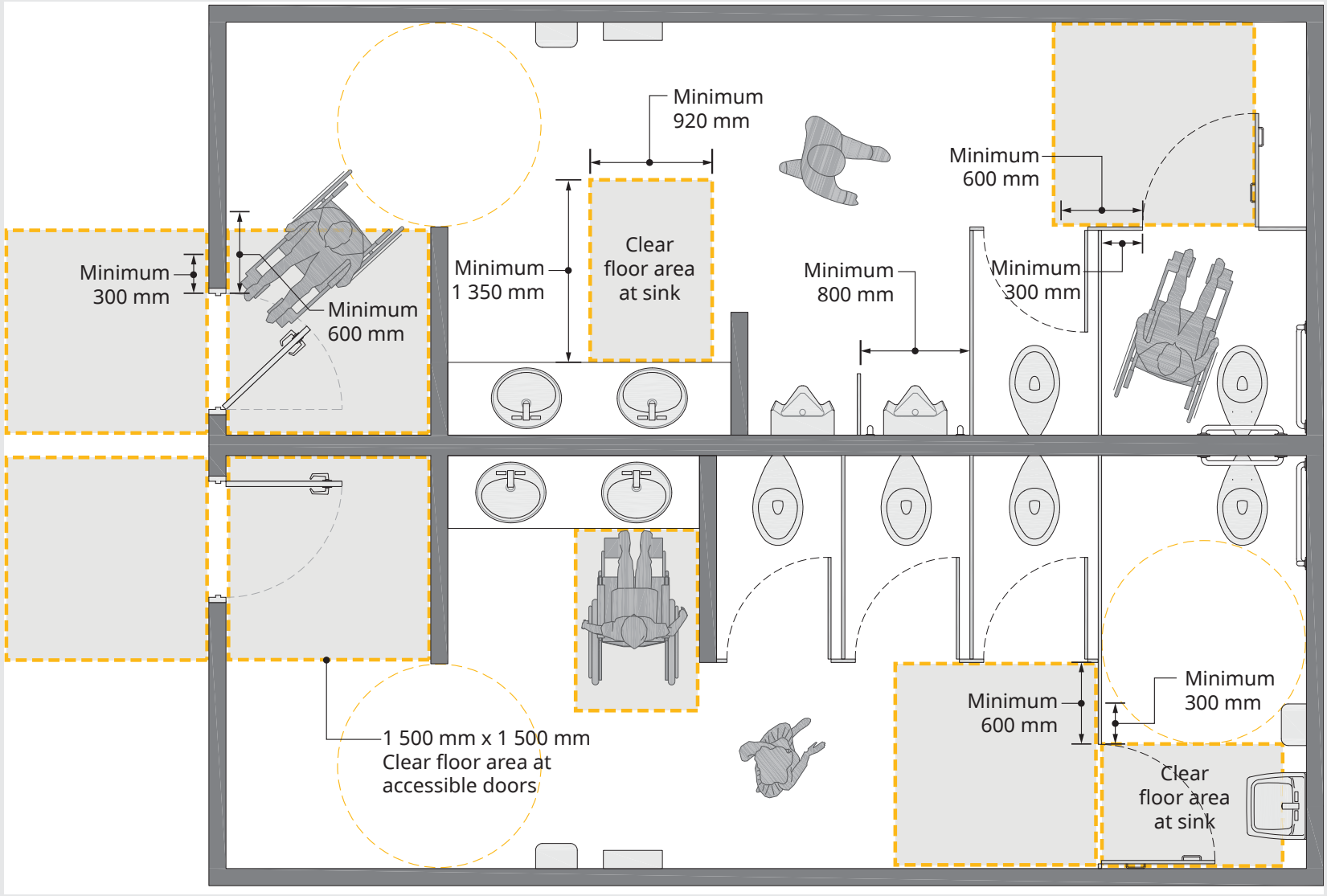

Figure 3.8.3.11.-A
Washrooms

The Code requires accessible water closet stalls to allow for transfer from a wheelchair to the water closet from the front, side, or at an angle. Figure 3.8.3.11.-B illustrates a side, or lateral, transfer sequence. The door should be offset from the water closet to assist those that prefer to reverse into the stall. Dividers that do not extend all the way to the floor can provide additional clearances for wheelchair footrests.

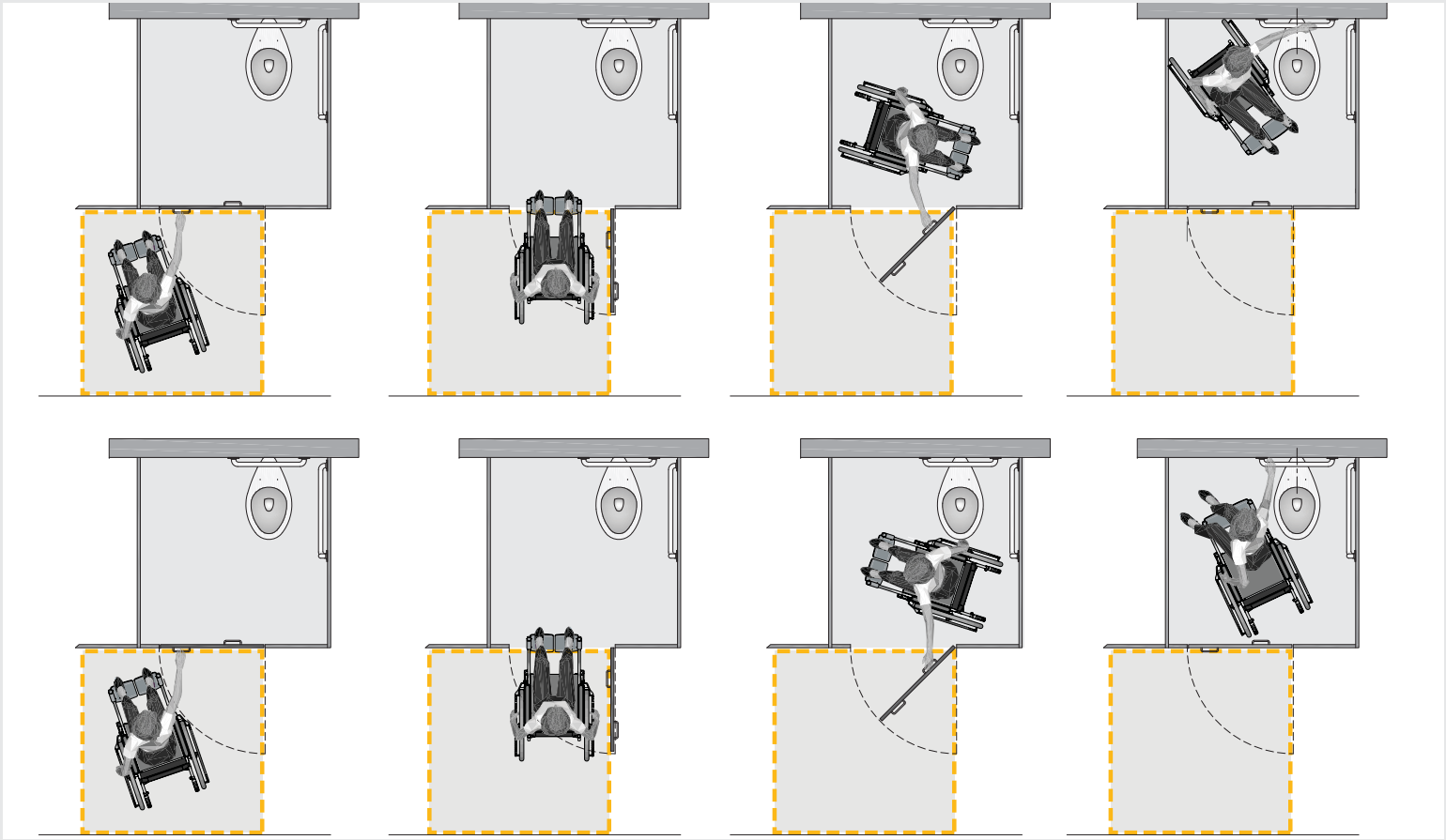

Figure 3.8.3.11.-B
Transfer Sequence

The minimum remaining 1020 mm clearance on the non-grab bar side of the stall allows for side transfer to and from the water closet. This clearance is minimal and greater clearance is recommended. It is important that no obstructions such as waste receptacles be in this space.

Figure 3.8.3.11.-C shows water closet stall dimensions.

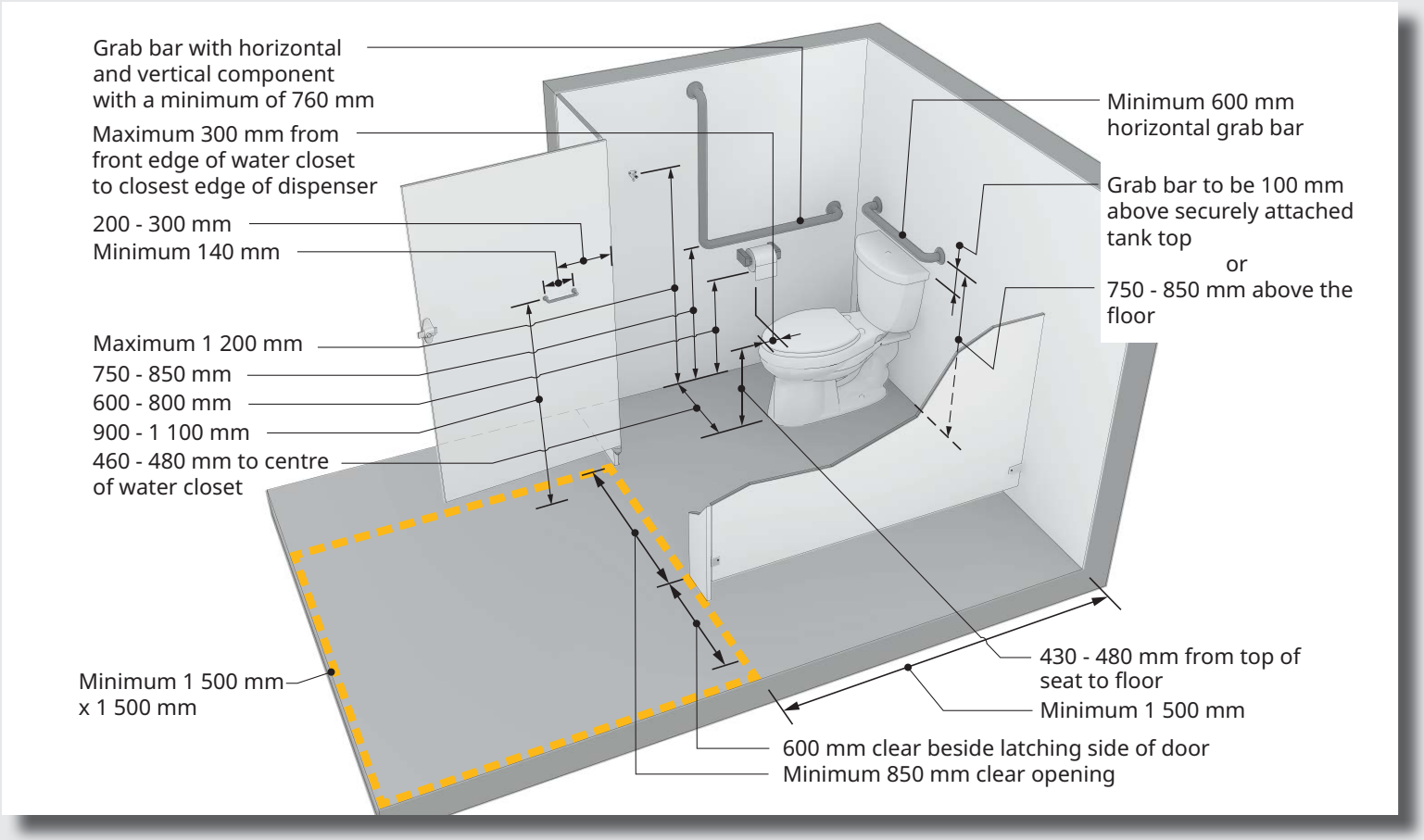

Figure 3.8.3.11.-C
Water Closet Stall

3.8.3.12. Universal Washrooms (See Note A-3.8.3.12.)

A-3.8.3.12. Universal Washrooms. Unobstructed areas in front of the lavatory, in front of the water closet and on one side of the water closet are necessary for maneuverability of a wheelchair. Fixtures, including additional fixtures, should be located so as to be useable and also to provide maneuverability for persons using wheelchairs. Wall-mounted fixtures may project into the required floor space, provided that such projections do not restrict the maneuvering space required for persons using wheelchairs. Although power operated and outward swinging doors are preferable for accessibility, manually operated as well as inward swinging doors are also permitted. Figures A-3.8.3.12.-A and A-3.8.3.12.-B show design options that meet the intent of Article 3.8.3.12.

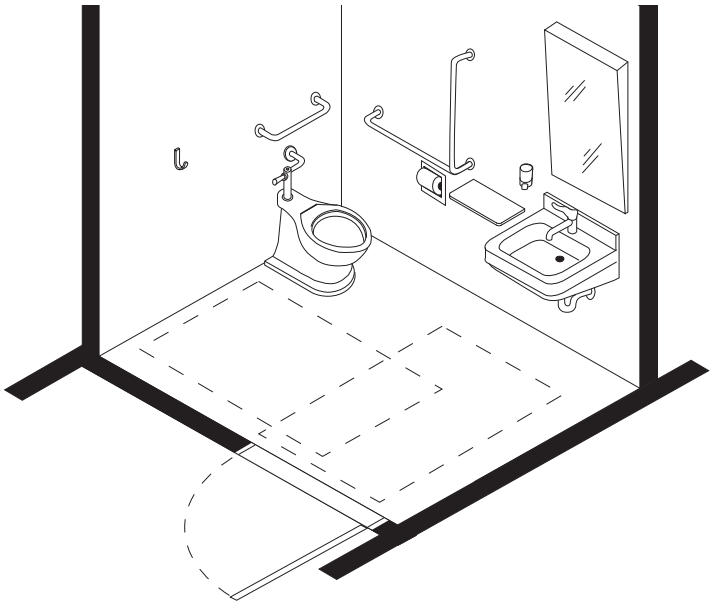

Figure A-3.8.3.12.-A
Universal washroom with outward swinging door

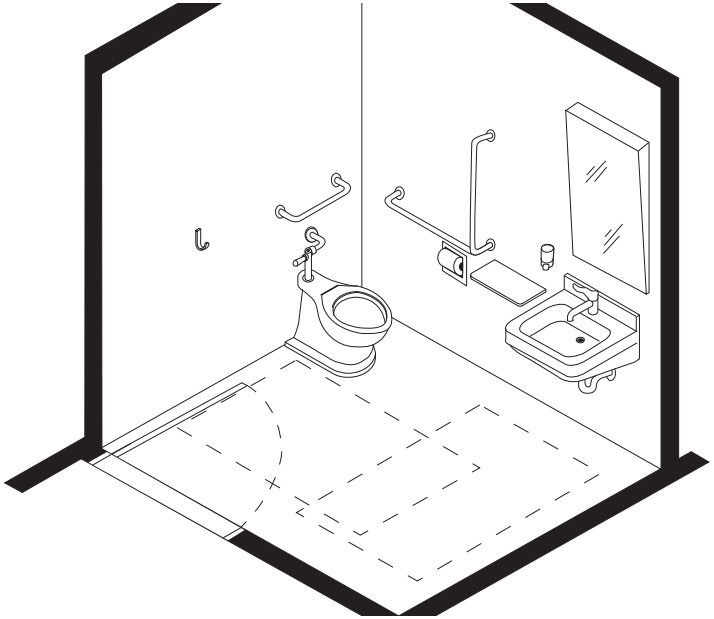

Figure A-3.8.3.12.-B
Universal washroom with inward swinging door

1) A universal washroom shall

a) be served by an *accessible* path of travel,

b) have a door complying with Article 3.8.3.6. that

i) has a latch-operating mechanism located 900 mm to 1 100 mm above the floor that complies with Clause 3.8.3.8.(1)(c) and is capable of being locked from the inside, and released from the outside in case of emergency, and

ii) if it is an outward swinging door that is not self-closing, is provided with a horizontal, D-shaped, visually contrasting door pull not less than 140 mm long located on the inside such that its midpoint is 200 mm to 300 mm from the hinged side of the door and 900 mm to 1 100 mm above the floor (See Note A-3.8.3.11.(1)(c)(vi)),

c) have one lavatory and one mirror conforming to Article 3.8.3.15.,

d) have one water closet conforming to Article 3.8.3.13. and Clause 3.8.3.11.(1)(d), with a clear floor space at least 900 mm wide that is parallel and adjacent to the open side of the water closet,

e) have grab bars conforming to Clauses 3.8.3.11.(1)(e) and (f),

f) have a coat hook conforming to Clause 3.8.3.11.(1)(g),

g) have a toilet paper dispenser conforming to Clause 3.8.3.11.(1)(h),

h) unless counter space of not less than 200 mm by 400 mm is provided, have a shelf located not more than 1 200 mm above the floor with a useable surface of not less than 200 mm by 400 mm, and

i) have a floor space of not less than

i) 3.7 m² with no dimension less than 1 700 mm when the door swings out, and

ii) 4.0 m² with no dimension less than 1 800 mm when the door swings in.

Attributions [F74-OA2]

Intent: To limit the probability that people using a manual wheelchair or other manual mobility assistance device will be unable to access and make use of a water closet and lavatory.

Intent: To limit the probability that the only accessible washroom facilities will be located in single gender washrooms, which could lead to the inability of a caregiver of a different gender to provide assistance to a person using a manual wheelchair or other manual mobility assistance device who needs to use a washroom.

Attributions (b) [F10-OS3.7]

Intent: To limit the probability that people will not be able to quickly egress a washroom in an emergency situation, which could lead to delays in evacuation or movement to a safe place, which could lead to harm.

Intent: To expand the application of Article 3.8.3.15. to a lavatory in a universal washroom.

Intent: To expand the application of Article 3.8.3.13. and Clause 3.8.3.11.(1)(d) to a water closet installed in a universal washroom.

Intent: To expand the application of Clauses 3.8.3.11.(1)(e) and 3.8.3.11.(1)(f) to grab bars installed in universal washrooms.

continued next page

continued from previous page

Attributions (f) [F30-OS3.1] Applies to the requirement for a coat hook.

Intent: To limit the probability that a coat hook will project excessively into the stall or enclosure space, which could lead to people hitting themselves on the coat hook, which could lead to harm.

Intent: To expand the application of Clause 3.8.3.11.(1)(g) to universal washrooms.

Attributions (h) [F74-OA2] Applies to the requirement for a shelf.

Intent: To limit the probability that people using a manual wheelchair or other manual mobility assistance device will not have a shelf on which to place personal items while making use of a washroom.

Attributions [F72-OH2.1] [F71-OH2.3]

Intent: To limit the probability that people using a manual wheelchair or other manual mobility assistance device will be unable to access and use:

- a water closet, which could lead to unsanitary conditions, which could lead to harm, and
- a lavatory, which could lead to an inability to maintain personal hygiene, which could lead to harm.

Intent: To limit the probability that the only accessible washroom facilities will be located in single gender washrooms, which could lead to the inability of a caregiver of a different gender to provide assistance to a person using a manual wheelchair or other manual mobility assistance device who needs to use a washroom, which could lead to unsanitary conditions, which could lead to harm.

Attributions (b) [F74-OA2] Applies to portion of Code text: "... b) ... a door capable of being locked from the inside ..."

Intent: To limit the probability that people will not be able to secure a universal washroom, which could lead to inconvenience in using the facility.

Figure 3.8.3.12. provides examples of universal washroom layouts. The layouts shown can be altered minimally and still meet the requirements. A great deal of care should be taken with layouts other than those shown and if other layouts are anticipated, the floor area may have to be increased. The first and third designs are preferred because the emergency access to the washroom is less likely to be blocked by a wheelchair.

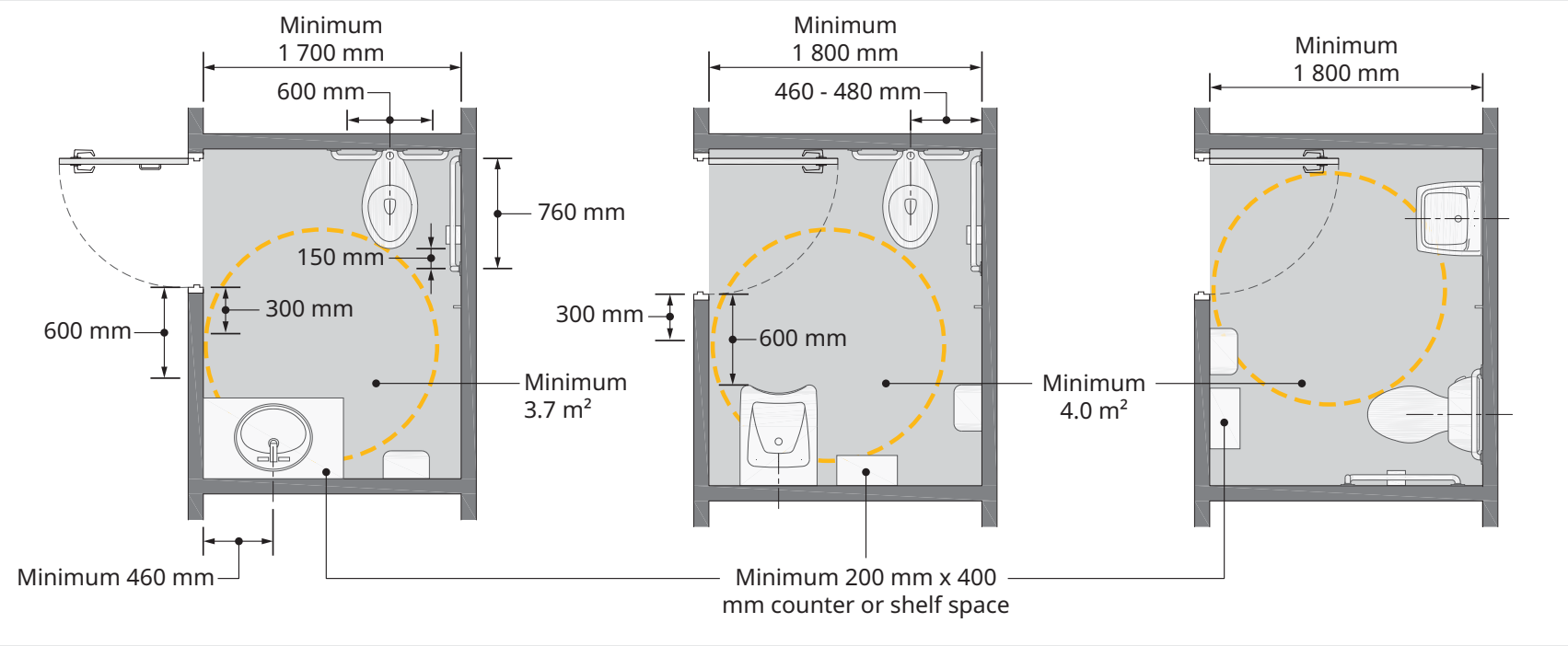

Figure 3.8.3.12.
Universal Washroom Example

3.8.3.13. Water Closets

1) A water closet for a person with physical disabilities shall

a) be equipped with a seat that is not the spring-up type located 430 mm to 480 mm above the floor,

b) flush automatically or be equipped with a flushing control that

i) is located 500 mm to 900 mm above the floor,

ii) is located not more than 350 mm from the transfer side, and

iii) complies with Clause 3.8.3.8.(1)(c),

c) be equipped with a seat lid or other back support, and

d) where it has a tank, have a securely attached tank top.

(See Note A-3.8.3.13.(1).)

Attributions [F74-OA2]

Intent: To limit the probability that people using a manual wheelchair or other manual mobility assistance device will not be able to use a water closet without the assistance of another person.

Attributions [F72-OH2.1]

Intent: To limit the probability that people using a manual wheelchair or other manual mobility assistance device will not be able to use a water closet without the assistance of another person, which could lead to unsanitary conditions, which could lead to harm.

A-3.8.3.13.(1) Water Closets. Wall- or floor-mounted water closets with recessed bases are preferable because they provide the least amount of obstruction.

Wheelchair users generally require a higher water closet seat to facilitate transfer from their chair to the water closet. Removable high-lift seats are not recommended in public washrooms as they could be removed or damaged by vandals. Permanently installed vandal resistant high-lift seats are available for installation on standard height water closets and these could be considered in place of the high bowl required.

To facilitate transfer from a wheelchair to a water closet, the water closet seat height should be the same or slightly lower than the wheelchair seat height. A recommended height of 475 mm corresponds with the height of many wheelchair seats.

Removable seats are not acceptable. Permanently installed vandal- and theft-resistant high-lift seats are available for installation on lower height water closet bowls.

The flush control needs to be on the transfer or non-grab bar side of the water closet. A flush valve should have its handle facing the non-grab bar side.

A bolted down tank provides stability to reduce the possibility of slipping during transfer.

A seat lid or other back support must be useable. A seat lid when raised should be approximately 95° to 105° to the seat. Instead of using a water closet seat lid to provide back support, a permanent support can be attached to the wall or the flush riser pipe. Such a support must be designed to allow enough space for the occupant to comfortably use the water closet. Although it is desirable for a grab bar to clear and protect a flush valve, it must not interfere with a seat lid providing back support.

Figure 3.8.3.13. shows dimensions for a water closet, controls and grab bars.

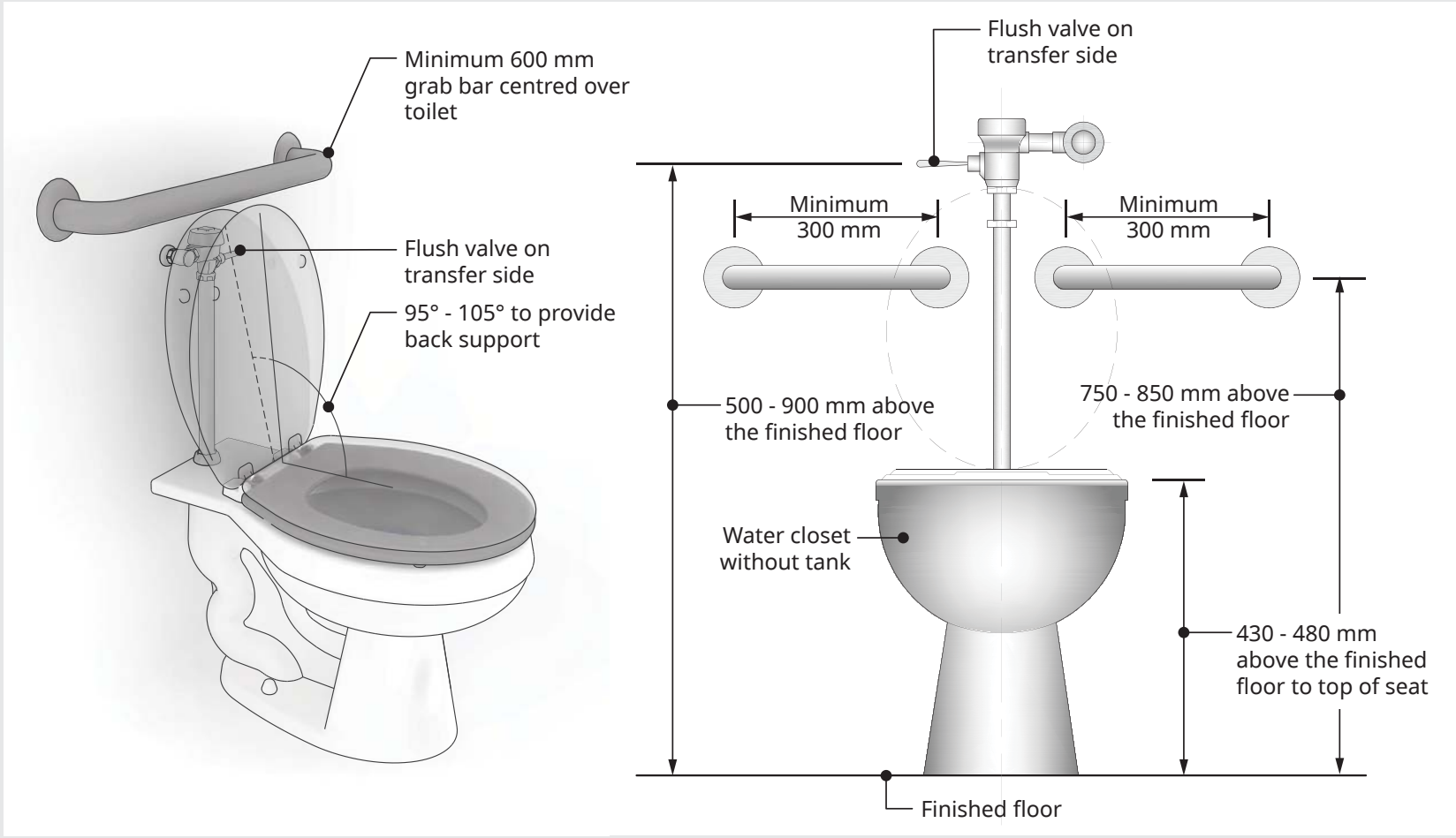

Figure 3.8.3.13.
Water Closet

3.8.3.14. Urinals

1) Urinals described in Sentence 3.8.2.8.(6) shall

a) be wall-mounted or floor mounted, with the opening of the basin located not more than 430 mm above the floor,

b) be adjacent to an *accessible* route,

c) have a clear width of approach of 800 mm centred on the urinal and unobstructed by privacy screens,

d) have no step in front of it,

e) have a flush control that

i) is automatic, or

ii) complies with Clause 3.8.3.8.(1)(c) and is located 900 mm to 1 100 mm above the floor, and

f) have a vertically mounted grab bar installed on each side that

i) complies with Article 3.7.2.8.,

ii) is not less than 600 mm long, with its centre line 1 000 mm above the floor, and

iii) is located not more than 380 mm from the centre line of the urinal.

Attributions [F74-OA2]

Intent: To limit the probability that people using a manual wheelchair or other manual mobility assistance device will not be able to use a urinal without the assistance of another person.

Attributions (f) [F30-OS3.1]

Intent: To limit the probability that the absence of grab bars will lead to people slipping or falling, which could lead to harm.

Attributions (c)

Intent: To exempt urinals from the requirement for a greater minimum width as stated in Sentence 3.8.3.2.(1) and permit a lesser minimum width, on the basis that urinals need not be wider to allow proper usage by people using manual wheelchairs or other manual mobility assistance devices.

3.8.3.15. Lavatories and Mirrors

1) Lavatories required by Sentence 3.8.2.8.(7) shall

a) be equipped with faucets complying with Sentence 3.7.2.3.(4),

b) be located to provide a clear floor space in front of the lavatory of not less than 920 mm wide by 1 350 mm deep centered on the lavatory,

c) have a rim height not more than 865 mm above the floor,

d) have a clearance beneath the lavatory not less than

i) 760 mm wide,

ii) 735 mm high at the front edge,

iii) 685 mm high at a point 250 mm back from the front edge, and

iv) 250 mm high to a point 500 mm back from the front edge, (see Note A-3.8.3.15.(1)(d))

Attributions [F74-OA2]

Intent: To limit the probability that people using a manual wheelchair or other manual mobility assistance device will not be able to use a lavatory in an accessible washroom without the assistance of another person.

Intent: [Subclause 3.8.3.15.(1)(d)(i)] To exempt lavatories from the requirement for a greater minimum width as stated in Sentence 3.8.3.2.(1) and permit a lesser minimum width, on the basis that lavatories need not be wider to allow proper usage by people using manual wheelchairs or other manual mobility assistance devices.

continued next page

A-3.8.3.15.(1)(d) Clearances Beneath a Lavatory.

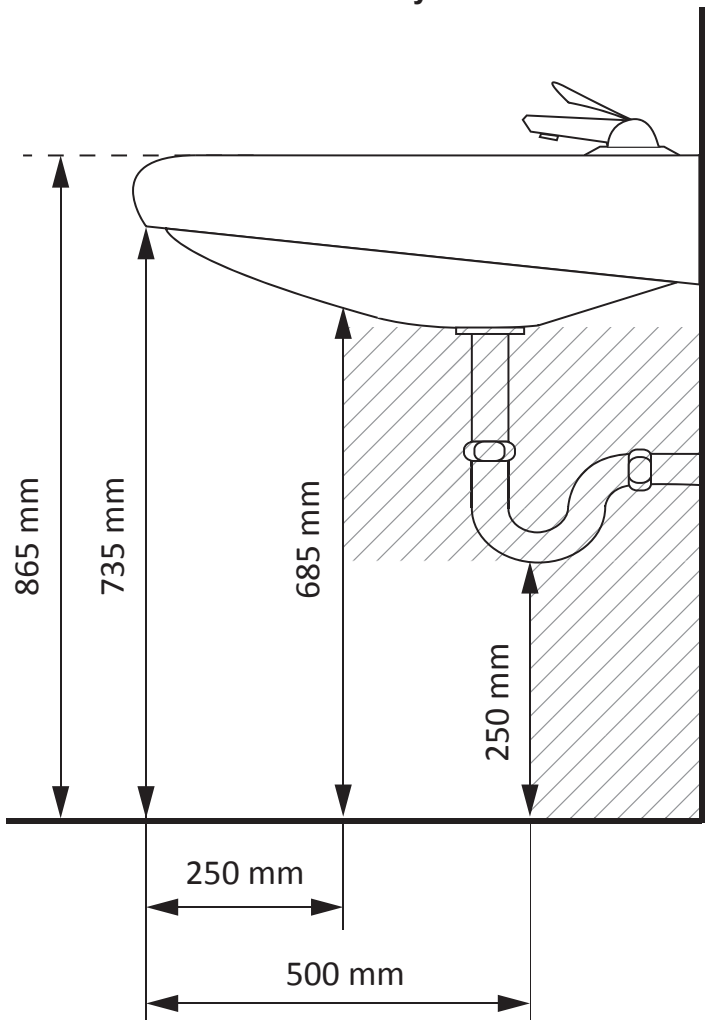

Figure A-3.8.3.15.(1)(d)
Clearances beneath a lavatory

e) have insulated water supply and drain pipes where these pipes are exposed (see Note A-3.8.3.15.(1)(e)),

continued from previous page

Attributions [F71-OH2.3]

Intent: To limit the probability that people using a manual wheelchair or other manual mobility assistance device will not be able to wash their hands after using the washroom facilities without the assistance of another person, which could lead to unsanitary conditions, which could lead to harm.

Intent: [Subclause 3.8.3.15.(1)(d)(i)] To exempt lavatories from the requirement for a greater minimum width as stated in Sentence 3.8.3.2.(1) and permit a lesser minimum width, on the basis that lavatories need not be wider to allow proper usage by people using manual wheelchairs or other manual mobility assistance devices.

Attributions (e) [F31-OS3.2]

Intent: To limit the probability that the legs or knees of people using a manual wheelchair will come into contact with a hot pipe, which could lead to burning or scalding, which could lead to harm.

A-3.8.3.15.(1)(e) Pipe Protection. The pipes referred to in Clause 3.8.3.15.(1)(e) include both supply and waste pipes. The hazard can be prevented by insulating the pipes, by locating the pipes in enclosures, or avoided by limiting the temperature of the hot water to a maximum of 45°C.

f) have a soap dispenser that

i) is automatic, or

ii) complies with Clause 3.8.3.8.(1)(c) and is located not more than 1 100 mm above the floor, within 500 mm from the front of the lavatory (see Note A-3.8.3.15.(1)(f)), and

A-3.8.3.15.(1)(f) Soap Dispenser Location. The location of accessories, such as soap dispensers and faucets, serving accessible lavatories should be established while taking into consideration that their controls must be usable by and within the direct reach of a person in a seated position directly in front of the accessible lavatory.

g) have a towel dispenser or other hand-drying equipment located close to the lavatory, with operating controls not more than 1 200 mm above the floor in an area that is accessible to persons using wheelchairs.

The location of accessories and controls serving the accessible lavatory must be within the direct reach of a person in a seated position directly in front of the accessible lavatory. Soap dispensers and faucets must be located so that they are useable by a person from the same seated position directly in front of the accessible lavatory.

Figure 3.8.3.15.-A illustrates the need for clearance under a lavatory. The clear space requirements shown are the minimum. Minor features, such as the lavatory's front overflow drain, may project into this space provided it can be shown that such projections will not interfere with the ability of people using wheelchairs to reach the faucet lever(s) and lavatory accessories. The use of an offset trap also ensures that footrest space is clear.

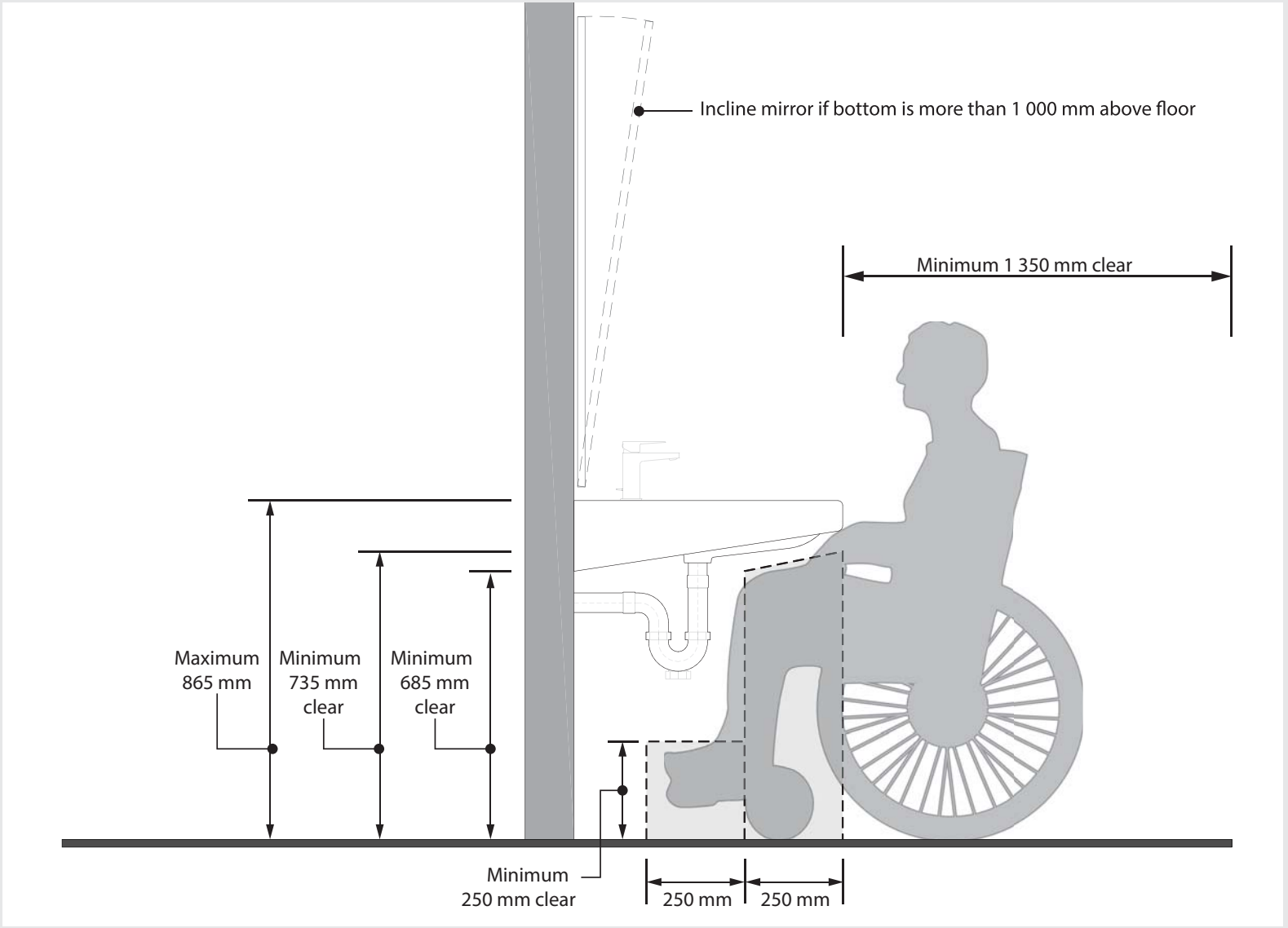

Figure 3.8.3.15.-A
Clearance Under Lavatory

When locating accessories consider keeping them near the accessible lavatory. Soap and towel dispensers or air dryers must be close to the lavatory. Consider the process of washing one's hands with soap and drying them with as little maneuvering as possible. Figure 3.8.3.15.-B shows washroom fixture and accessory heights above the floor.

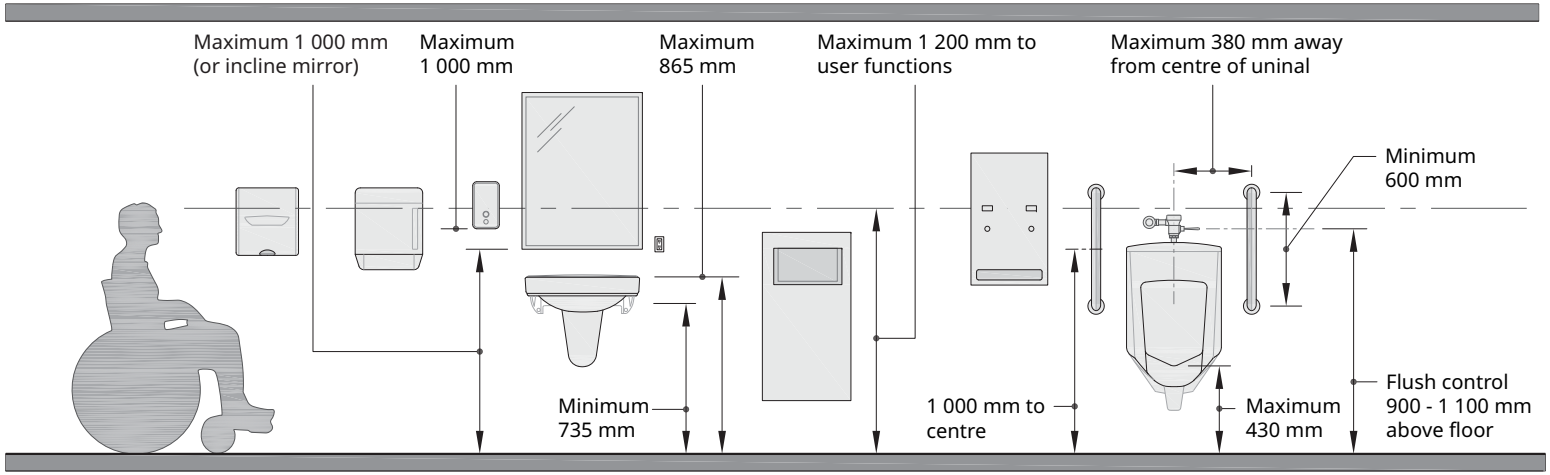

Figure 3.8.3.15.-B
Washroom accessories

2) Mirrors required by Sentence 3.8.2.8.(8) shall be

a) mounted with their bottom edge not more than 1 000 mm above the floor, or

b) fixed in an inclined position so as to be usable by a person using a wheelchair.

Attributions [F74-OA2]

Intent: To limit the probability that people using a manual wheelchair or other manual mobility assistance device will not be able to use a mirror without the assistance of another person.

3.8.3.16. Showers

1) Showers required by Sentence 3.8.2.8.(10) shall

a) have an entrance not less than 1 500 mm wide and be not less than 900 mm deep,

b) have a clear floor space at the entrance to the shower that is not less than 900 mm deep and the same width as the shower, except that fixtures are permitted to project into that space provided they do not restrict access to the shower (See Note A-3.8.3.16.(1)(b)),

A-3.8.3.16.(1)(b) Clear Space at Entrances to Showers.
The clear space at the entrance to a shower may be encroached upon by fixtures such as a wall hung sink which does not interfere with the leg rests of the wheelchair. However, this sink could restrict movement for persons who need to make a lateral transfer if it were installed at the seat end of the shower.

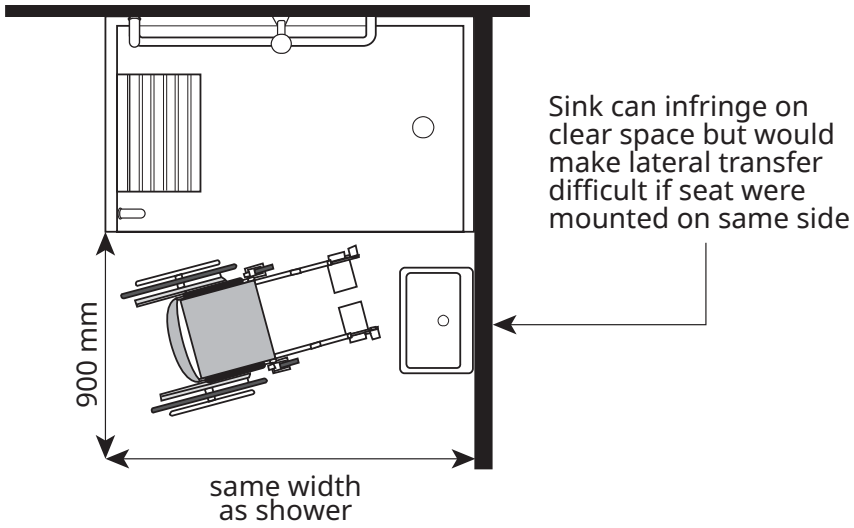

Figure A-3.8.3.16.(1)(b)
Shower design

Attributions [F74-OA2]

Intent: To limit the probability that shower facilities will not be provided for people using a manual wheelchair or other manual mobility assistance device, which could lead to the person being denied access in situations in which regulations call for people to shower, such as swimming pools, saunas, water parks, whirlpools, etc.

Intent: To allow for proper usage by people using a manual wheelchair or other manual mobility assistance device.

Attributions (d),(e),(f),(g),(h),(i),(j) [F30-OS3.1]

Intent: (d),(e) To limit the probability that people will slip or fall while using the shower facilities, which could lead to harm.

Intent: (f) To limit the probability that the absence of grab bars will lead to people slipping or falling, which could lead to harm.

Intent: (f) To expand the application of Sentence 3.7.2.8.(1) to accessible showers.

Intent: (f) To limit the probability that a grab bar will have an insufficient resistance to loads, which could lead to the collapse of the grab bar, which could lead to people falling, which could lead to harm.

Attributions (g) [F20-OS3.1]

Attributions (g) [F80-OH2.3]

Attributions (g) [F71-OH2.3] Applies to the portion of the Code text: "...v) ... designed to be easily cleaned ..."

Attributions (h),(i) [F31-OS3.2]

Intent: To limit the probability that it not be possible to control the water temperature in the shower, which could lead to people being scalded while using the shower facilities, which could lead to harm.

c) have no doors or curtains that obstruct the controls or the clear floor space at the entrance to the shower,

d) have a slip-resistant floor surface,

e) have a threshold not more than 13 mm higher than the finished floor, and where it is higher than 6 mm, beveled to a slope no steeper than 1 in 2,

f) have 2 grab bars that

i) conform to Sentence 3.7.2.8.(1),

ii) one of which is not less than 1 000 mm long and located vertically on the side wall 50 mm to 80 mm from the adjacent clear floor space, with its lower end 600 mm to 650 mm above the floor, and,

iii) one of which is L-shaped and located on the wall opposite the entrance to the shower, with a horizontal member not less than 1 000 mm long mounted 750 mm to 870 mm above the floor and a vertical member not less than 750 mm long mounted 400 mm to 500 mm from the side wall on which the other vertical grab bar is mounted ,

(see Note A-3.8.3.16.(1)(f)),

A-3.8.3.16.(1)(f) Grab Bars. One L-shaped grab bar is required to be installed on the wall next to the seat. A grab bar behind the seat would prevent the user from leaning back against the wall, while one located on the wall opposite the seat cannot be reached from the seated position. The seat itself may be used in conjunction with the bar for transfer. If design flexibility is required, fold away grab bars can be used as an alternative.

g) have a hinged seat that is not spring-loaded or a fixed seat with a smooth, slip-resistant surface and no rough edges, the seat being

i) not less than 450 mm wide and 400 mm deep,

ii) mounted on the same side wall as the vertical grab bar, at 460 mm to 480 mm above the floor, and

iii) designed to carry a minimum load of 1.3 kN,

iv) impervious to water, and

v) designed to be easily cleaned,

h) have a pressure-equalizing or thermostatic-mixing valve and other controls that

i) comply with Clause 3.8.3.8.(1)(c), and

ii) are mounted on the wall opposite the entrance to the shower at not more than 1 200 mm above the floor and within reach of the seat,

i) have a hand-held shower head with not less than 1 800 mm of flexible hose located so that it

i) can be reached from a seated position,

ii) can be used in a fixed position at a height of 1 200 mm and 2 030 mm, and

iii) does not obstruct the use of the grab bars, and

j) have recessed soap holders that can be reached from the seated position.

An accessible shower can be incorporated into multiple-shower areas provided the requirements of Article 3.8.3.16. are met. For example, a partial wall or partition may be all that is necessary to accommodate the hinged or fixed seat and grab bars. Most shower doors impede access into the shower stall due to the size of the opening they provide and/or because of floor mounted tracks. Shower curtains are acceptable and doors which would not impede access any more than a curtain are also acceptable.

The slope of the floor for drainage purposes should be kept to a minimum and the drain is best located under the seat. Figure 3.8.3.16. illustrates an accessible shower compartment.

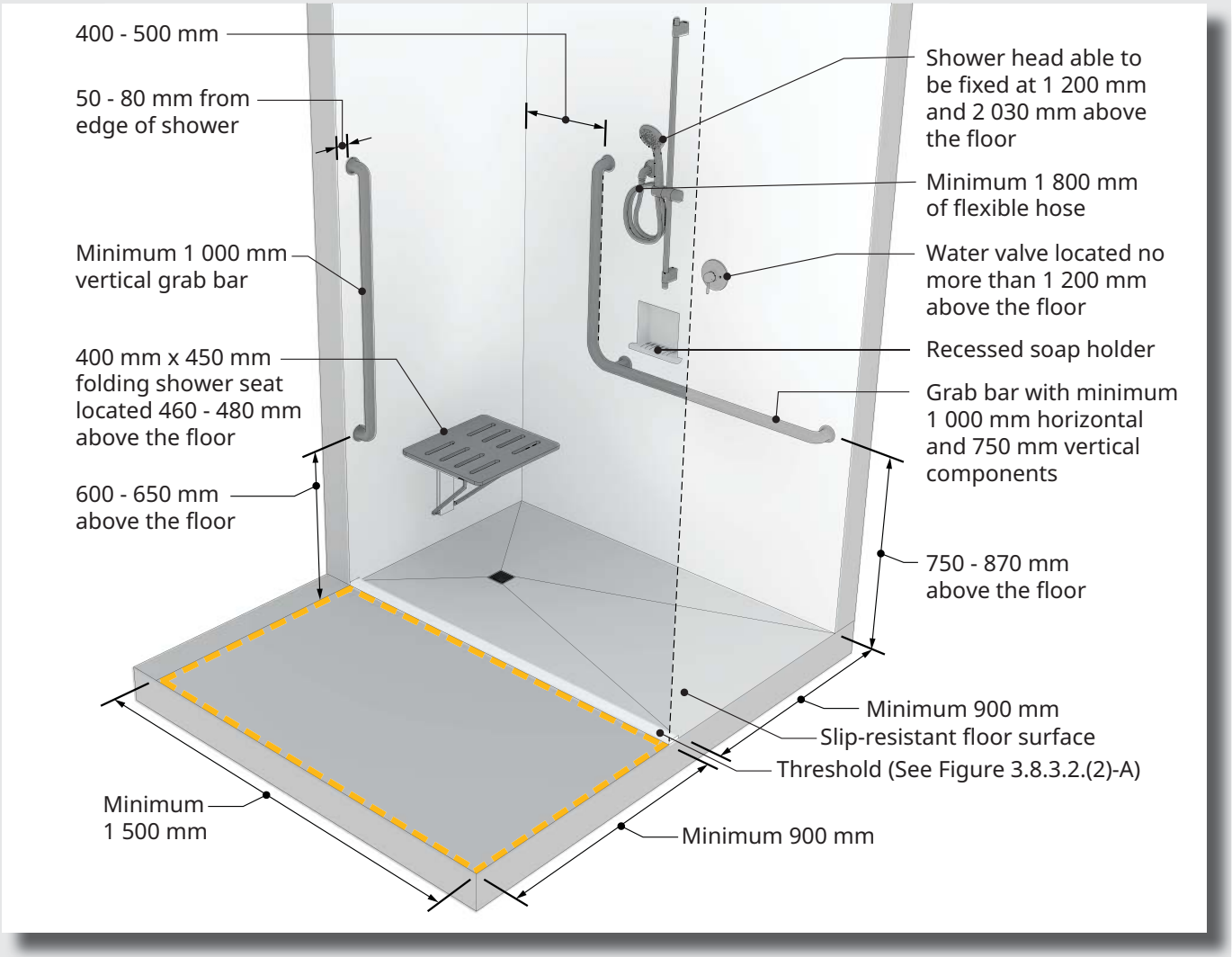

Figure 3.8.3.16.
Shower compartment

3.8.3.17. Bathtubs

Attributions [F74-OA2]

Intent: To limit the probability that a bathtub will not be provided for people using a manual wheelchair or other manual mobility assistance device, which could lead to people not being able to bathe without the assistance of another person.

Attributions (e),(h) [F31-OS3.2]

Attributions (f),(g),(h),(i),(j) [F31-OS3.2]

1) Bathtubs required by Sentence 3.8.2.8.(11) shall

a) be located in a room with a clear floor space not less than 1 500 mm in diameter,

b) be not less than 1 500 mm long,

c) have a clear floor space at the entrance to the bathtub not less than 900 mm wide and the same length as the bathtub, except that fixtures are permitted to project into that space provided they do not restrict access to the bathtub,

d) be capable of being accessed along its full length with no tracks mounted on its rim,

e) have a pressure-equalizing or thermostatic-mixing valve and other controls that

i) conform to Clause 3.8.3.8.(1)(c), and

ii) are located on the centre line or between the centre line of the bathtub and the exterior edge of the bathtub rim, at a maximum height of 450 mm above the rim and within reach of the seat,

f) have three grab bars

i) that conform to Sentence 3.7.2.8.(1),

ii) that are not less than 1 200 mm long,

iii) two of which are located vertically at each end of the bathtub, set 80 mm to 120 mm in from the outside edge of the bathtub, with their lower end 180 mm to 280 mm above the bathtub rim, and

iv) one of which is located horizontally along the length of the bathtub at 180 mm to 280 mm above the bathtub rim,

g) have a slip-resistant bottom surface,

h) be equipped with a hand-held shower head that complies with Clause 3.8.3.16.(1)(i),

i) have a removable seat with a smooth, slip-resistant surface and no rough edges that is

i) wide enough to give stability to the user (see Subclause 3.8.3.16.(1)(g)(i)), and

ii) complies with Subclauses 3.8.3.16.(1)(g)(iii) to (v), and

j) have recessed soap holders that can be reached from the seated position.

(See Note A-3.8.3.17.)

A-3.8.3.17. Bathtubs. Hand showers should be located at the same end of the bath as the controls and accessories such as soap holders should be located and useable within direct reach of a person in a seated position.

Figure 3.8.3.17. illustrates an accessible bathtub.

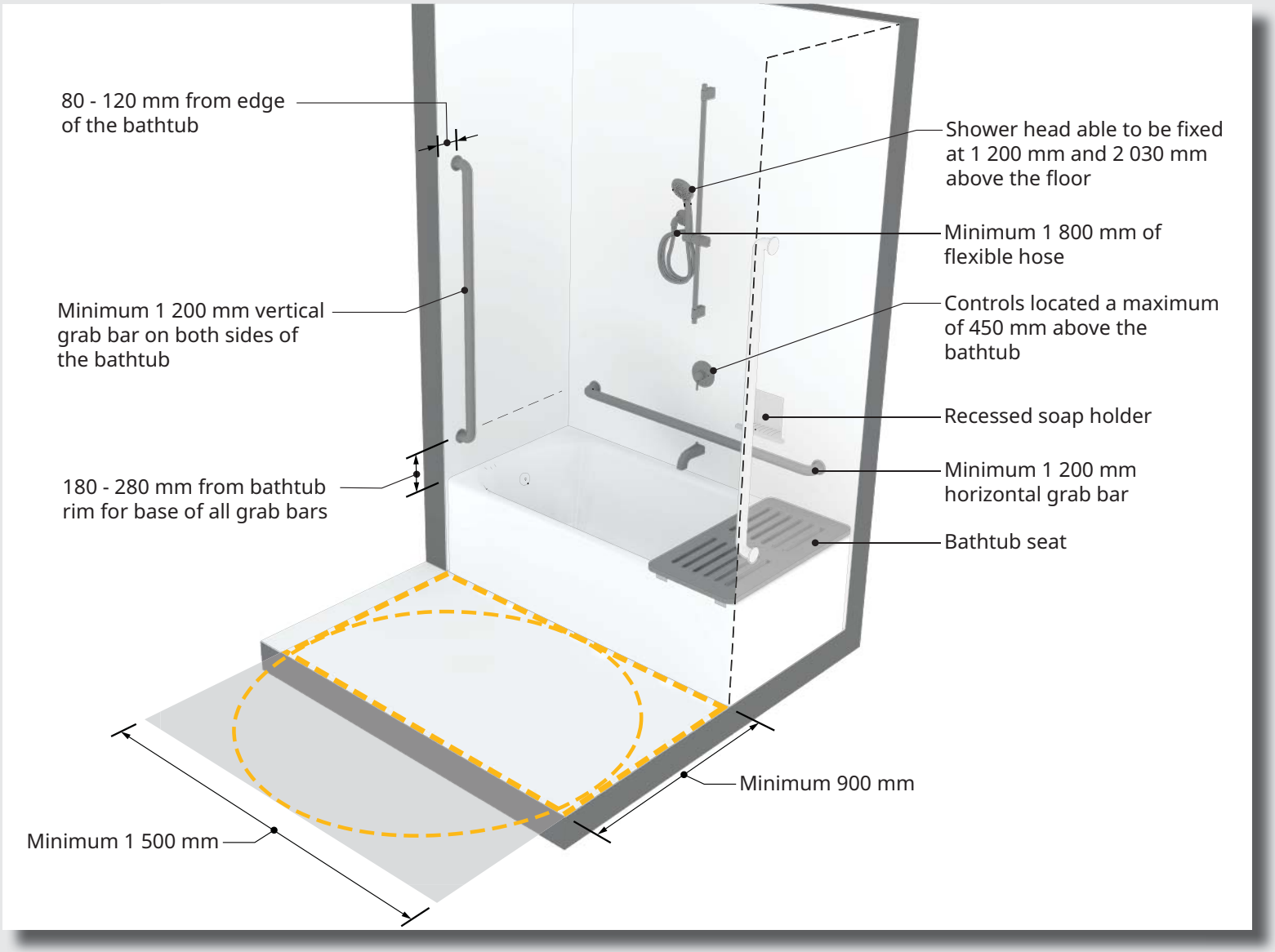

Figure 3.8.3.17.
Bathtub

3.8.3.18. Assistive Listening Devices

(See Note A-3.8.3.18.)

A-3.8.3.18. Assistive Listening Systems. Wireless sound transmission systems, including FM, infrared or magnetic induction loop systems, improve sound reception for persons who are deaf or hard of hearing by providing amplification which can be adjusted by each user while blocking out unwanted background noise. These systems transmit a signal that is picked up by a special receiver available for use by a person who is deaf or hard of hearing, whether or not a hearing aid is used. Neither system interferes with the listening enjoyment of others.

The transmitter can be jacked into an existing P.A. system amplifier or used independently with microphones. The induction loop system requires users to sit in the area circumscribed by the loop; though installation of the loop is relatively simple, the installer should be knowledgeable about these systems if proper functioning is to be achieved. FM or infrared systems can be designed to broadcast signals which cover the entire room and thus do not restrict seating to any one area. Figures A-3.8.3.18.-A and A-3.8.3.18.-B show the general configuration of FM and infrared systems. Although portable systems (FM in particular) are available, these are best suited to small audiences. Generally, the systems installed in church halls, auditoria, theatres and similar places of assembly are not easily portable, as they are installed in a fixed location by a sound technician and form an integral part of the P.A. system of the room or building.

Hard-wired systems (where a jack is provided at a particular seat) will not meet this requirement unless adequate provisions are made to accommodate persons with hearing aids. In choosing the most appropriate system, a number of factors must be taken into account including cost, installation and maintenance, suitability to the audience, ease of operation and the need for privacy. Information on designers and suppliers of these systems may be obtained from the Canadian Hearing Society.

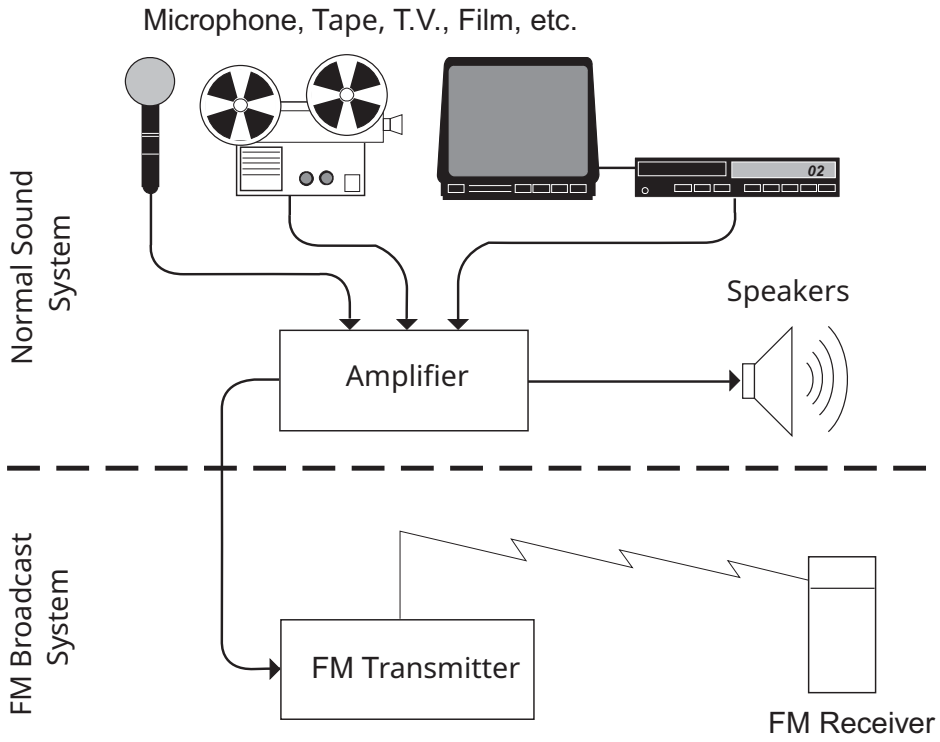

Figure A-3.8.3.18.-A
FM sound transmission system

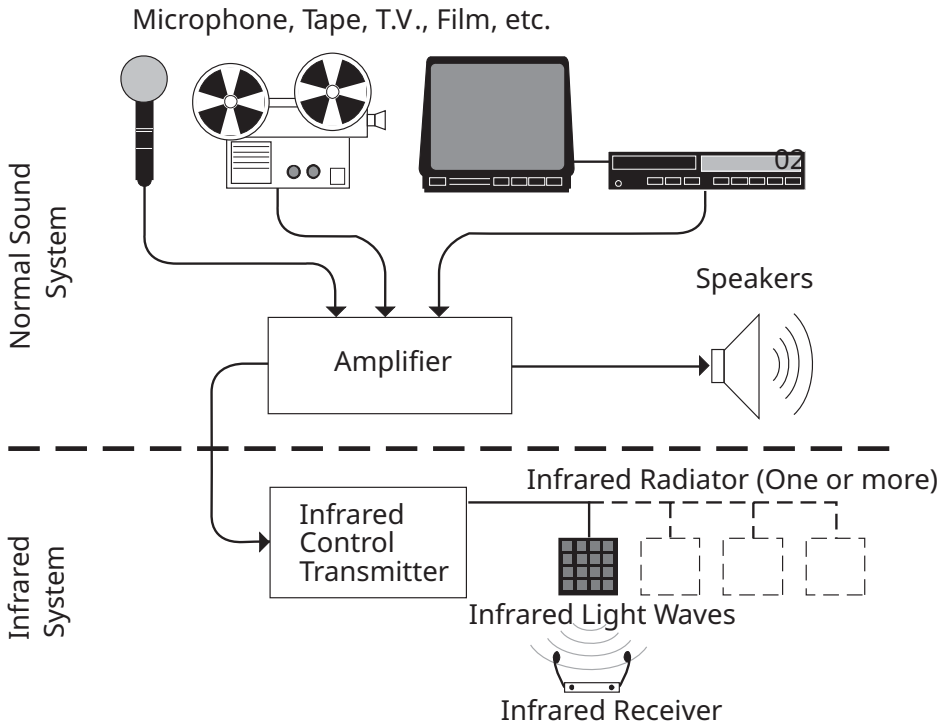

Figure A-3.8.3.18.-B
Infrared sound transmission system

1) Except as provided in Sentence (2), assistive listening systems required by Article 3.8.2.9. shall encompass the entire seating area.

Attributions [F74-OA2]

Intent: To limit the probability that people who are deaf or hard of hearing will be unable to properly hear performances or discussions in assembly occupancies and large classrooms, auditoria, meeting rooms and theatres.

Attributions [F11-OS3.7]

Intent: To limit the probability that people who are deaf or hard of hearing will be unable to properly hear fire alarm signals or emergency messages, which could lead to delays in evacuating or moving to a safe place, which could lead to harm.

2) If an assistive listening system referred to in Article 3.8.2.9. is an induction loop system, only half the seating area in the room need be encompassed.

Intent: To supersede the requirements of Sentence 3.8.3.18.(1), which would otherwise require the assistive listening system to be installed throughout the entire seating area, and permit an induction loop system to be installed in only half the seating area, on the basis that people who are deaf or hard of hearing can be seated within the area served by the induction loop system.

The induction loop system requires users to sit in the area surrounded by the loop whereas FM and infrared systems can be designed to broadcast signals which cover the entire room. Although portable systems are permitted, they are better suited to small audiences. Good acoustics are required for any of these systems to function adequately.

More information is available from the Canadian Hard of Hearing Association, B.C. Chapter (www.chha.ca).

3.8.3.19. Counters

1) Counters required by Sentence 3.8.2.11.(1) shall have

a) at least one *accessible* section not less than 760 mm long, adjacent to a clear floor space of not less than 800 mm by 1 350 mm, centred over a knee space conforming to Clause (c),

b) a surface not more than 865 mm above the floor, and

c) except as provided in Sentence (2) and where the counter is intended to be used as a work surface, a knee space underneath it that is

i) not less than 760 mm wide,

ii) not less than 685 mm high, and

iii) not less than 485 mm deep.

Attributions [F74-OA2]

Intent: To limit the probability that people using a manual wheelchair or other manual mobility assistance device will not be able to be served at a service counter or to use a work surface or counter without the assistance of another person.

Figure 3.8.3.19. illustrates an accessible counter.

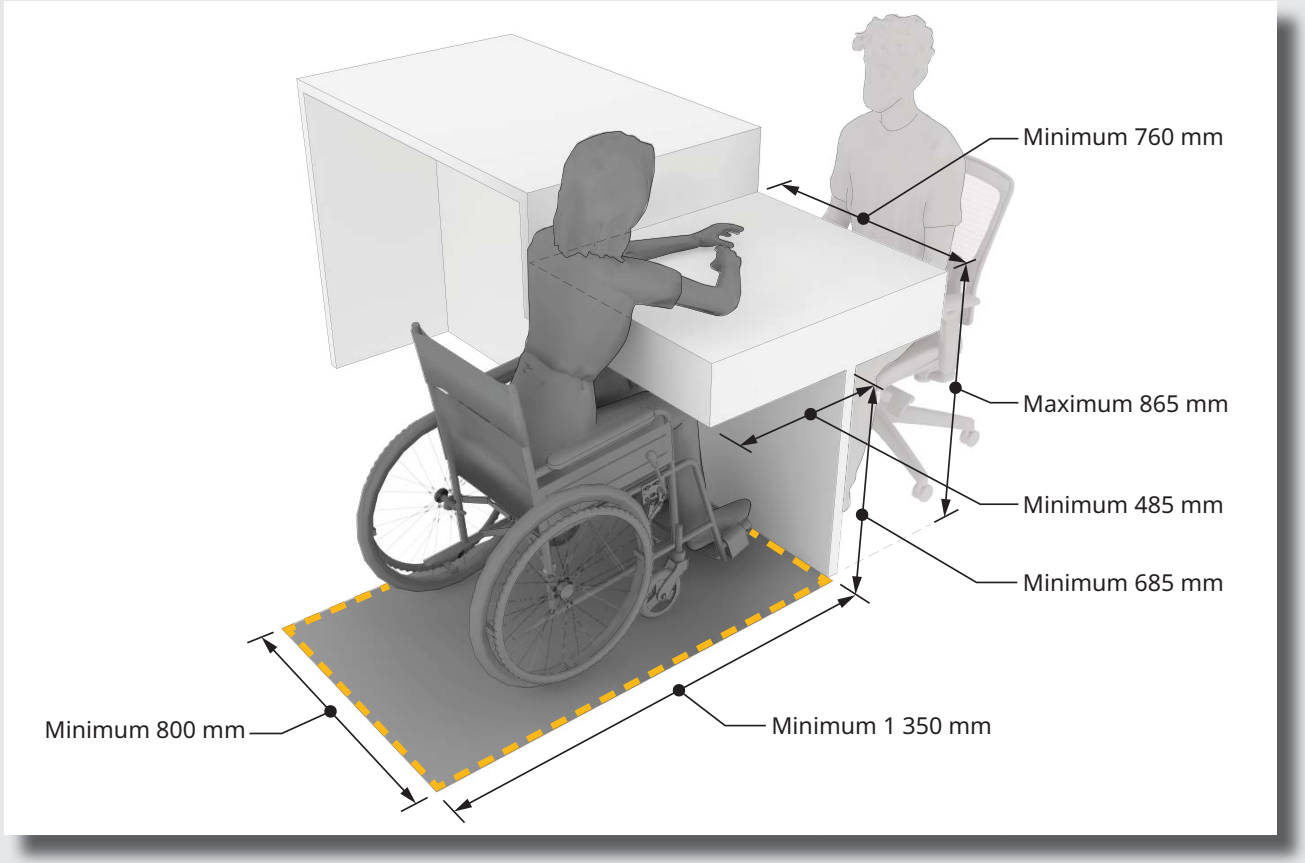

Figure 3.8.3.19.
Counter

2) A counter that is used in a cafeteria, or one that performs a similar function where movement takes place parallel to the counter, need not be provided with a knee space underneath it.

Intent: To exempt counters from the requirements of Clause 3.8.3.19.(1)(c), which would otherwise require knee space, on the basis that movement takes place parallel to the counter.

See Figure 3.8.3.2.(1)-C showing a food service line. Note the recommended height for the rail tray to align with counters and have a surface not more than 865 mm above the floor.

3.8.3.20. Shelves or Counters for Telephones

(See Note A-3.8.3.20.)

A-3.8.3.20. Telephone Shelves or Counters. Built-in shelves or counters for public telephones must be designed to accommodate persons using text telephones (TT). These devices may also be referred to as teletypewriters (TTY) or telecommunication devices for the deaf (TDD). These devices require a level surface at least 305 mm deep by 250 mm wide with no obstruction above that space within 250 mm. If a wall-hung telephone or other obstruction extends to less than 250 mm from the shelf or counter, an equivalent clear space must be provided on either side of each telephone. At least one telephone should be equipped with a volume control on a receiver that generates a magnetic field compatible with the T-switch of a hearing aid. The lower portion of the shelf or counter is intended for persons using a wheelchair; therefore all parts of the operating mechanism of the telephone above this portion should be within reach of a wheelchair user.

Signage should identify accessible public telephones as being useable by persons using wheelchairs and persons who are deaf or hard of hearing.

1) Shelves or counters required by Sentence 3.8.2.11.(2) shall

a) be level,

b) be not less than 350 mm deep,

c) have, for each telephone provided, a clear space not less than 250 mm wide having no obstruction within 250 mm above the surface,

d) have a section with a surface not more than 865 mm above the floor serving at least one telephone, and

e) have a clear floor space of not less than 800 mm by 1 350 mm centred on and within 300 mm in front of the telephone.

Attributions [F74-OA2]

Intent: To limit the probability that people using a manual wheelchair or other manual mobility assistance device will not be able to make use of a telephone and telephone shelf or counter without the assistance of another person.

A shelf is needed for people who connect a telecommunication device for the deaf to a telephone.

2) Where a wall-hung telephone is provided above the shelf or counter section described in Clause (1)(d), it shall be located so that the receiver and coin slot are not more than 1 200 mm above the floor.

Attributions [F74-OA2]

Intent: To limit the probability that people using a manual wheelchair or other manual mobility assistance device will not be able to make use of a public telephone without the assistance of another person.

Figure 3.8.3.20.(2) illustrates accessible public telephone installation examples. Locating the receiver and coin slot at 900 mm above the floor improves usability from a seated position. Installing the telephone so it can be approached side-on with a counter beside it also improves usability. Note the sign indicating the telephone is equipped with an amplifier.

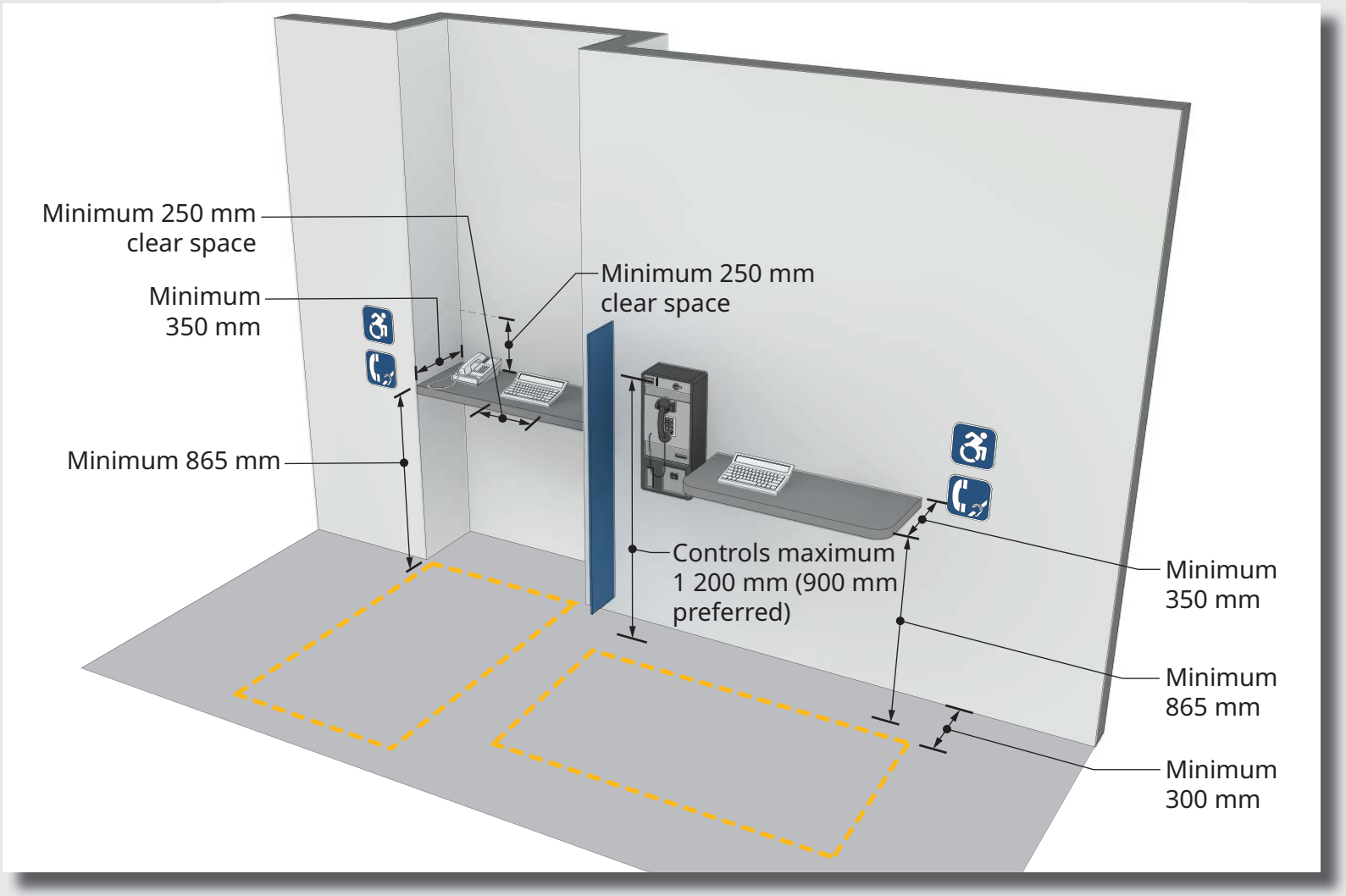

Figure 3.8.3.20.(2)
Public telephones

3.8.3.21. Spaces in Seating Area

1) Spaces designated for wheelchair use referred to in Sentence 3.8.2.3.(3) shall be

a) clear and level, or level with removable seats,

b) not less than 900 mm wide and 1 525 mm long to permit a wheelchair to enter from a side approach and 1 350 mm long where the wheelchair enters from the front or rear of the space,

c) arranged so that at least 2 designated spaces are side by side,

d) located adjoining an *accessible* path of travel without infringing on egress from any row of seating or any aisle requirements, and

e) situated, as part of the designated seating plan,

i) to provide a choice of viewing location,

ii) to provide a clear view of the event taking place, and

iii) in motion picture *theatres*, to not be in the front third of the seating area.

Attributions [F74-OA2] Applies to entire Sentence except for portion of Code text: "... without infringing on egress from any row of seating or any aisle requirements ..."

Intent: To limit the probability that spaces for manual wheelchairs will be obstructed or won't be level, or will be of insufficient size, which could lead to people using manual wheelchairs being unable to use the spaces, which could lead to people being excluded from certain rooms and areas.

Intent: To limit the probability that spaces for manual wheelchairs will be of insufficient size to accommodate 2 manual wheelchairs side by side, which could lead to the isolation of people using manual wheelchairs, which could lead to inconvenience.

Intent: To limit the probability that spaces for manual wheelchairs will not be accessible for people using manual wheelchairs, which could lead to people being excluded from certain rooms and areas.

Intent: To limit the probability that spaces for manual wheelchairs will be located in areas where there is not a choice of viewing locations and a clear view of the event taking place, which could lead to inconvenience.

Attributions [F30-OS3.1] Applies to portion of Code text: "... level, or level with removable seats ..."

Intent: To limit the probability that spaces for manual wheelchairs will not be level, which could lead to people using a manual wheelchair losing control of the manual wheelchair and rolling away from the space, which could lead to harm to the person or people nearby.

Attributions 3.8.3.21.(1)(d) [F10-OS3.7]

Intent: To limit the probability that people using manual wheelchairs in spaces designated for manual wheelchair use will infringe on or obstruct egress routes, which could lead to delays in the evacuation or movement of people to a safe place in an emergency situation, which could lead to harm.

Some people who use wheelchairs may travel with a companion and should be able to sit together. To provide for this, the 900 mm width can be increased to 1400 mm to accommodate a removable seat supplied by the establishment. Accessible viewing positions can also be located adjacent to fixed seats provided the viewing space is level.

A person using a wheelchair may sit higher than people in adjacent fixed seats. Care should be taken to arrange accessible viewing positions so that they do not obstruct the view of people who may be sitting behind.

Accessible viewing positions should not be bunched together nor completely segregated. Rather, accessible viewing positions should be distributed throughout the seating area allowing a reasonable choice of viewing location and ticket price. Side by side is intended to allow viewing positions across an aisle from each other as well as immediately adjacent.

Consider providing storage space for mobility devices during an event so that unused mobility devices do not obstruct aisles or passageways.

Figure 3.8.3.21. shows options for viewing positions, with companion seating in blue, in a motion picture theatre.

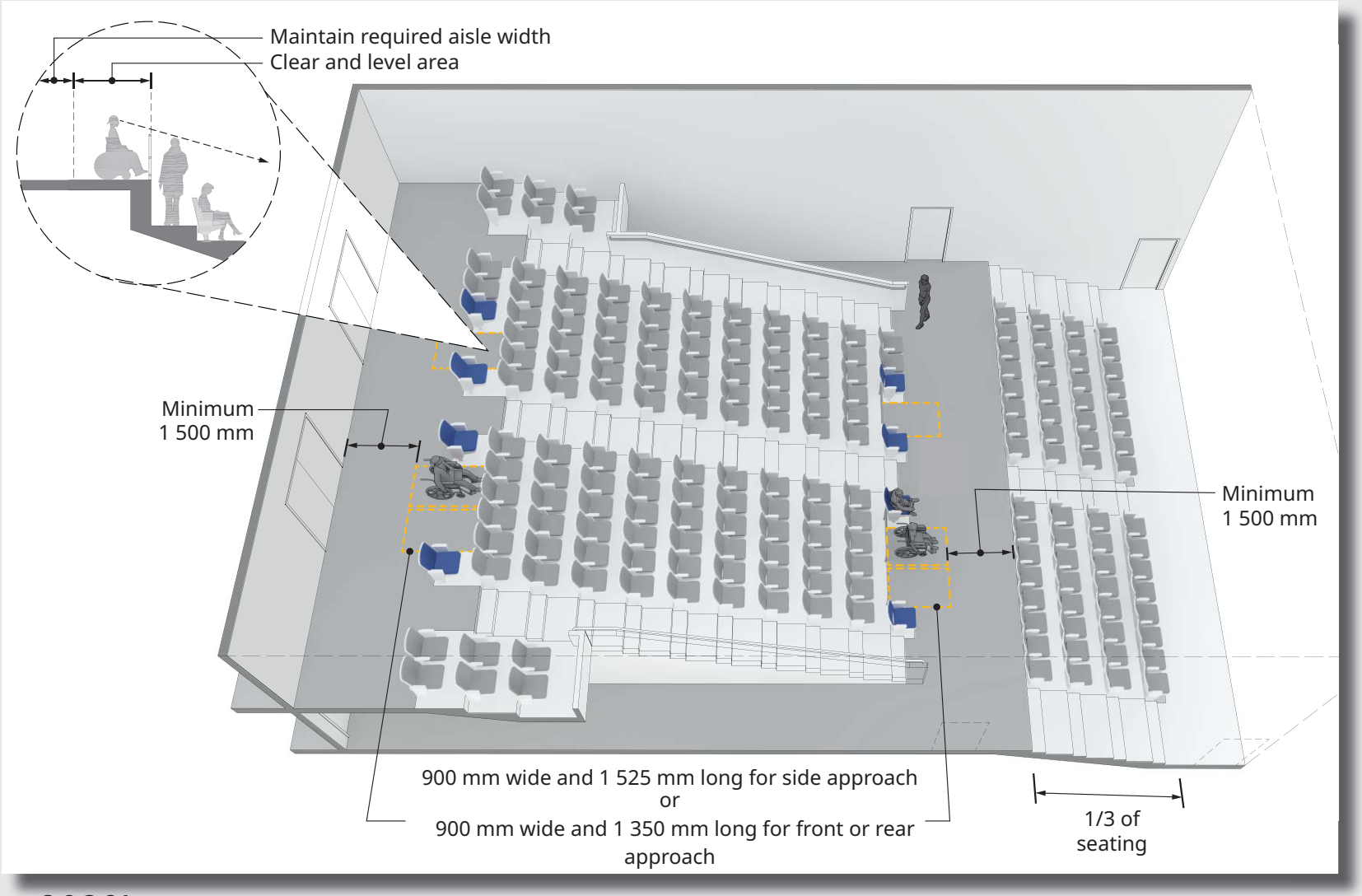

Figure 3.8.3.21.
Theatre seating area

It is desirable that the viewing positions in Group A, Division 1 occupancies be close to an exit and that both the building management and the fire department be aware of such locations in the event of an emergency.

3.8.3.22. Sleeping Rooms and Bed Spaces

(See Note A-3.8.3.22.)

A-3.8.3.22. Sleeping Rooms and Bed Spaces. Figure A-3.8.3.22. illustrates an acceptable layout of an accessible sleeping area.

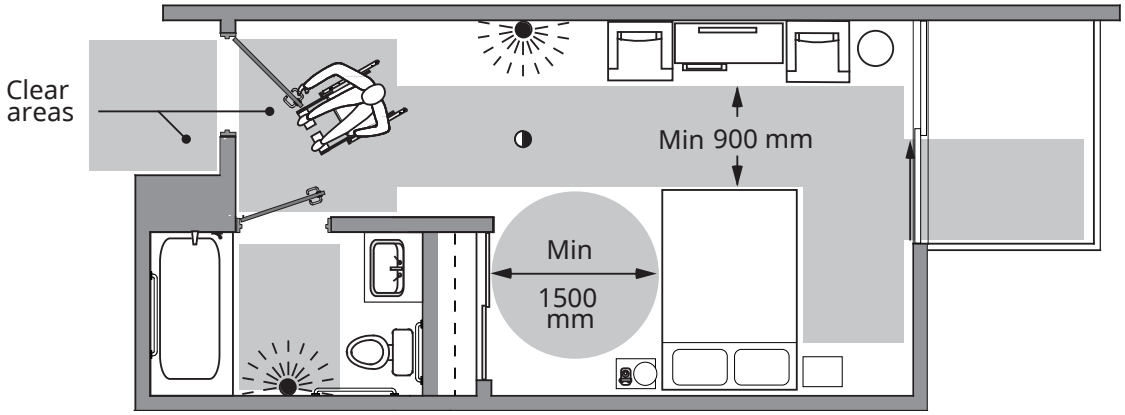

Figure A-3.8.3.22.
Sleeping rooms and bed spaces

1) Sleeping rooms and bed spaces required to be *accessible* in Sentence 3.8.2.12.(1) shall have

Attributions [F73-OA1]
Attributions [F74-OA2]

a) a turning area of not less than 1 500 mm in diameter on one side of a bed,

b) a clearance of not less than 900 mm to allow for functional use of the room or space by persons using wheelchairs,

c) when a balcony is provided, an *accessible* balcony,

d) at least one closet that provides

   i) a clear opening not less than 900 mm wide,

   ii) clothes hanger rods capable of being lowered to a height of 1 200 mm,

   iii) at least one shelf capable of being lowered to a height of 1 200 mm,

e) *accessible* light switches, thermostats and other controls that are specifically provided for use by the *occupant* located between 900 mm and 1 200 mm above the finished floor and operable in accordance with Clause 3.8.3.8.(1)(c),

f) *accessible* electrical outlets located in conformance with Clause 3.8.3.8.(1)(a), and

g) a bathroom, where provided as part of the sleeping room or bed space, or *access* to a bathroom, where not provided as part of the sleeping room or bed space

   i) conforming to Clauses 3.8.3.11.(1)(a) and (d) with a water closet conforming to Article 3.8.3.13.,

ii) provided with grab bars conforming to Clauses 3.8.3.11.(1)(e) and (f)

iii) provided with a lavatory and mirror conforming to Article 3.8.3.15., and

iv) provided with a bathtub conforming to Article 3.8.3.17. or a shower conforming to Article 3.8.3.16., only to the extent of providing the same type of facilities provided in sleeping rooms and bed spaces where *access* is not required.

An accessible balcony referred to in Clause 3.8.3.22.(1)(c) would typically be at the same elevation as the floor of the room with a maximum 13 mm threshold. A flush door sill could lead to serious water ingress problems, so this door threshold detail must be very carefully designed and constructed to avoid building envelope failure.

Subclause (1)(g)(i) references Article 3.8.3.13. which requires a water closet seat height located 430 mm to 480 mm above the floor. A high-lift seat may be used to meet this height requirement. A high-lift seat may be stored in the sleeping room or bed space or be available upon request.

When sleeping units are provided for people with disabilities it is recommended that the following be considered:

1. Place telephones so that they are accessible from both a wheelchair and a bed.
2. Place controls for television, lights and other features within reach from a bed.
3. If no patio doors are provided, at least one window should be located with a sill height approximately 610 mm above the floor. Note requirements for guards.
4. Have the top of a mattress at approximately the same height as a typical wheelchair seat (i.e., 450 mm to 500 mm) to help people transferring from one to the other.
5. When several accessible suites are provided in a building they should be distributed among the types and price ranges of suites that are generally available, including choices such as for bed sizes.
6. Sliding doors for closets and cabinets are preferred, but bi-fold doors are also acceptable.
7. Door closers should offer minimum resistance.
8. Use low pile carpeting on firm backing.
9. Windows and coverings should be easy to operate from a seated position.

See clearances for doors in Article 3.8.3.6.

3.8.4. Alterations and Additions to Existing Buildings

3.8.4.1. Application

1) Except as provided in Sentence (2), *access* as described in Articles 3.8.4.2. to 3.8.4.8. shall be provided

a) to additions to existing *buildings* where such additions have internal pedestrian connections with the existing *buildings,*

b) to existing parts of *buildings* to which additions described in Clause (a) are made, and

c) to the extent required by Article 3.8.4.5., to existing *buildings*

i) where the *occupancy* is changed, or

ii) that are altered or renovated.

2) This Subsection does not apply to

a) *buildings* of new construction,

b) vertical additions of one *storey* not more than 600 m² in *floor area* regardless of *occupancy*, or

c) horizontal or vertical additions to *occupancies* described in Clauses 3.8.2.1.(1)(a) to (g).

Building of new construction means a new building constructed as a separate entity, which is erected independently of other buildings. Building of new construction also means an addition to an existing building where the addition has no internal pedestrian connection with the existing building. Internal pedestrian connection means the path of travel for use of the building and its facilities and the path of travel for occupants exiting the building. Subsection 3.8.4. does not apply to the example of building of new construction shown in Plan A and Section C of Figure 3.8.4.1.(1) because Subsections 3.8.2. and 3.8.3. would be applicable.

Plan A and Section C of Figure 3.8.4.1.(1) show an example of an addition considered a building of new construction because there is no internal pedestrian connection with the existing building. Plan B and Section D show two additions where there is an internal pedestrian connection perhaps by way of stairs, corridors and elevators. Subsection 3.8.4. would be applicable to the example of Plan B and Section D.

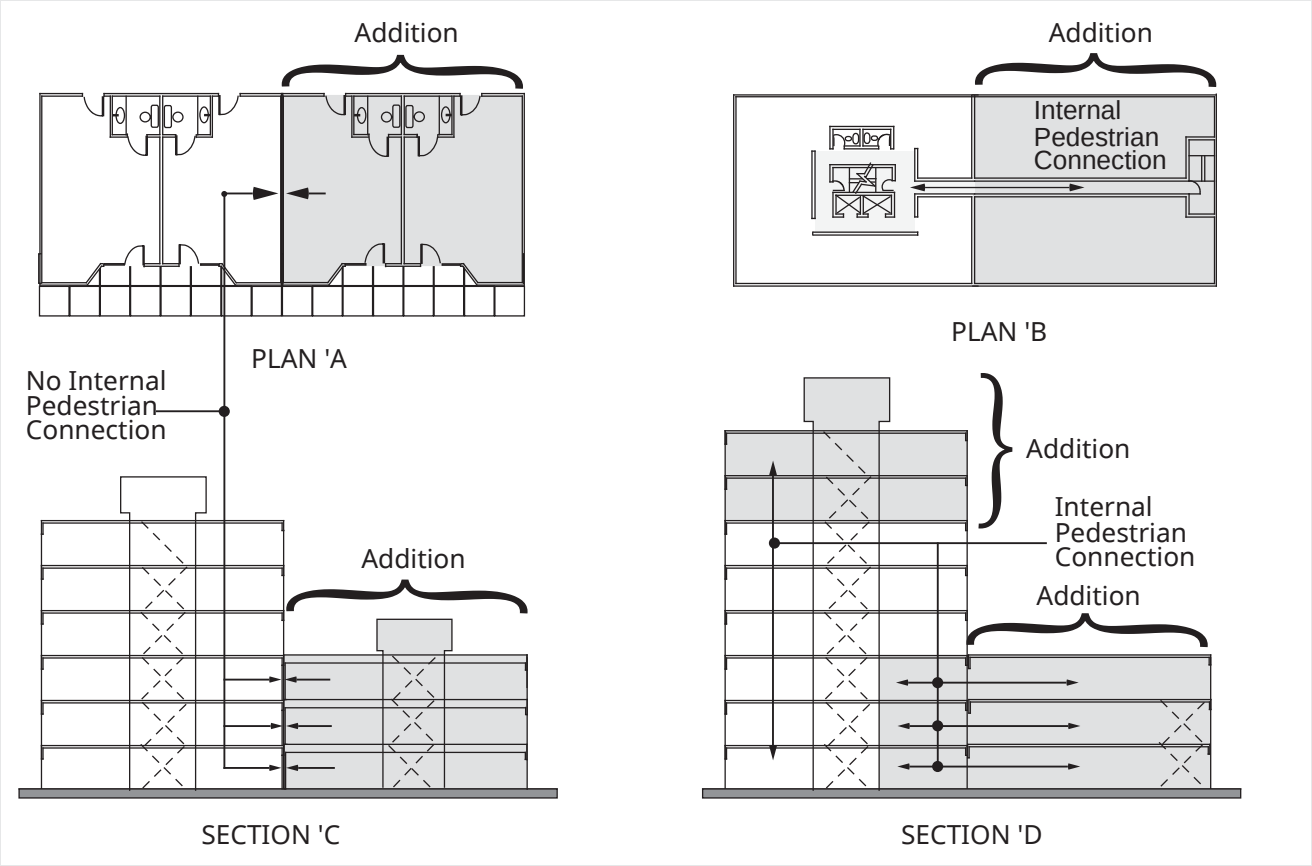

Figure 3.8.4.1.(1)
Additions to existing buildings

3.8.4.2. Specific Requirements

Attributions [F73-OA1]

1) Exterior *access* shall be provided to an addition except where *access* to the addition is provided by way of the existing *building*.

2) Walks and ramps for an addition shall conform to Subsection 3.8.3.

3) An entrance to an addition shall be *accessible* except where

a) the addition is *accessible* by an accessible path of travel from an *accessible* entrance serving the existing *building*, and

b) not less than 50% of the pedestrian entrances to the *building* are *accessible*.

Where an addition is made to a building and the addition incorporates one or more main entrances, it is recommended that they be accessible. However, in some instances providing access directly to an addition may not be practical for design or economic reasons. Article 3.8.4.2. allows access to be provided to the addition by way of the existing building.

3.8.4.3. Vertical Additions

Attributions [F73-OA1]
Attributions [F74-OA2]

1) Where there is a vertical addition of one *storey* and of more than 600 m² in *floor area,* or of two or more *storeys* regardless of *floor area,*

a) *access* shall be provided to all additional *storeys*, and

b) the additional *storeys* shall conform to Subsections 3.8.2. and 3.8.3.

3.8.4.4. Horizontal Additions

Attributions [F73-OA1]
Attributions [F74-OA2]

1) Where an existing *building* is extended horizontally, the requirements of Subsections 3.8.2. and 3.8.3. shall be applied to the addition except as described in Articles 3.8.4.2. and 3.8.4.6., and Sentence 3.8.4.8.(2).

3.8.4.5. Alterations and Occupancy Change

Attributions [F73-OA1]
Attributions [F74-OA2]

1) Where an existing *building* is altered or renovated, or where the *occupancy* is changed, access shall be provided in conformance with Subsections 3.8.2. and 3.8.3. where

a) *persons with disabilities* could reasonably be expected to be employed in, or could reasonably be expected to use, such an occupancy or *building*, and

b) providing such *access* would be practical.

The intent of Article 3.8.4.5. is to make buildings accessible when they undergo a change of use or are altered. It is rare that it would be considered unreasonable that people with disabilities would not be employed in or use any occupancy.

Cases where providing access to an altered building is not practical are more common perhaps. An example could be an alteration to a restaurant. Several steps separate the entrance from the sidewalk and there is simply no room to construct a ramp because the building is abutting the property line on the front and both sides while the rear is a full storey above the ground. Providing access to this building could be considered impractical based on the difficulty and high cost of installing a lift or an elevator.

3.8.4.6. Sleeping Rooms and Bed Spaces

Attributions [F74-OA2]

1) Where sleeping rooms or bed spaces are provided in an addition, the percentage of *accessible* sleeping rooms or bed spaces required by Subsection 3.8.2. to conform to Article 3.8.3.22. shall be based on the sum of sleeping rooms or bed spaces in the addition and in the existing *building*.

2) The *accessible* sleeping rooms or bed spaces required by Sentence (1) may be distributed between the addition and the existing *building*.

A broad range of the types of sleeping rooms and bed spaces available should be made accessible.

3.8.4.7. Existing Facilities

Attributions [F74-OA2]

1) Where an addition is required to be *accessible*, facilities located in the existing *building* that are necessary to the operation of the addition shall be *accessible*.

An existing building may already have accessible facilities such as washrooms, a cafeteria, or locker areas which meet occupant needs, even after the addition. Therefore, no such facilities may be provided in the addition, and the building remains accessible. Sentence (2) clarifies that universal washrooms are an alternative which could be provided in an existing building where modifying existing washrooms proves impracticable.

2) Where *alterations* are made to an existing *building*, universal washrooms complying with Subsection 3.8.3. are permitted to be provided in lieu of facilities for *persons with disabilities* in washrooms. (See Note A-3.8.2.8.(1) to (3).)

3.8.4.8. Egress from Floor Areas

Attributions [F73-OA1]
Attributions [F10,F73-OS1.5]

1) The egress requirements of Article 3.3.1.7. shall apply to the vertical additions described in Sentence 3.8.4.3.(1).

2) Where an existing *storey* is extended horizontally and the *building* is not *sprinklered* throughout, the protection requirements of Article 3.3.1.7. shall apply to

a) the extended portion of the *storey*, or

b) the combined area of the existing *storey* and the extension.

3.8.5. Adaptable Dwelling Units

3.8.5.1. Application

1) This Subsection applies to

a) the design and construction of one *storey adaptable dwelling units* in multiple unit *residential occupancy buildings* that employ interior corridors or exterior passageways for *access* to the *dwelling units,* and

b) the paths of travel and common facilities intended for use by the residents.

3.8.5.2. Construction Requirements

1) The construction of *adaptable dwelling units* and the *building* in which they are located shall conform to the requirements in this Subsection and to *access* requirements for *residential occupancy buildings* elsewhere in this Code.

3.8.5.3. Building Access Requirements

Attributions [F75-OA1]
Attributions [F75-OA2]

1) *Buildings* containing *adaptable dwelling units* shall

a) be provided with an *accessible* path of travel conforming to Subsection 3.8.3. to an entrance described in Article 3.8.2.2. and to each *adaptable dwelling unit* from

i) a sidewalk, roadway or *street*,

ii) where provided, a parking area,

iii) where provided, passenger-loading zones, and

iv) where an elevator is provided, to an elevator conforming to Article 3.5.2.1.

b) conform to Sentence 3.8.2.2.(6), and

c) provide *access* to all common facilities.

Attributions [F75-OA1]
Attributions [F75-OA2]

2) Corridors and passageways providing *access* to a*daptable dwelling* unit entrances and common facilities shall

a) be not less than 1 220 mm in width, and

b) provide a clear floor space not less than 1 500 mm by 1 500 mm

i) adjacent to the elevator entrance, and

ii) at intervals not exceeding 9 m where the corridor or passageway exceeds 9 m, measured from the elevator entrance to the end of the corridor or passageway.

Attributions [F75-OA1]
Attributions [F75-OA2]

3) Except as permitted in Sentence 3.8.5.4.(1), doorways and doors in the *accessible* path of travel throughout the *building* shall comply with Article 3.8.3.6.

4) Each *adaptable dwelling* unit shall be provided with special outlet boxes and cover plates as described in Sentence 3.2.4.19.(6). (See also Sentence 3.2.4.19.(7).)

3.8.5.4. Adaptable Dwelling Unit Doorways

Attributions [F75-OA1]
Attributions [F75-OA2]

1) Within an *adaptable dwelling unit*, doorways providing access to common living areas and at least one bathroom and one bedroom shall have a clear width of not less than 810 mm when measured in accordance with Clauses 3.8.3.6.(2)(a) and (b). (See Note A-3.8.5.4.(1).)

A-3.8.5.4.(1). Adaptable Dwelling Unit Doorways. Where sliding doors are used to provide access, it is necessary to consider the door hardware when determining clear width. Accessible hardware described in Sentence 3.8.3.6.(4) may result in a sliding door standing out from the jamb when in the open position. If not provided with the door during initial construction, accessible hardware when installed must not reduce the clear width of opening to less than required for access.

Attributions [F75-OA1]
Attributions [F75-OA2]

2) Floor space on both sides of the bathroom and bedroom doors referred to in Sentence (1) shall conform to Article 3.8.3.6.

3.8.5.5. Adaptable Dwelling Unit Bathrooms

(See Note A-3.8.5.5.)

A-3.8.5.5. Adaptable Dwelling Unit Bathtubs. Figure A-3.8.5.5. illustrates an acceptable grab bar layout of an adaptable dwelling unit bathtub.

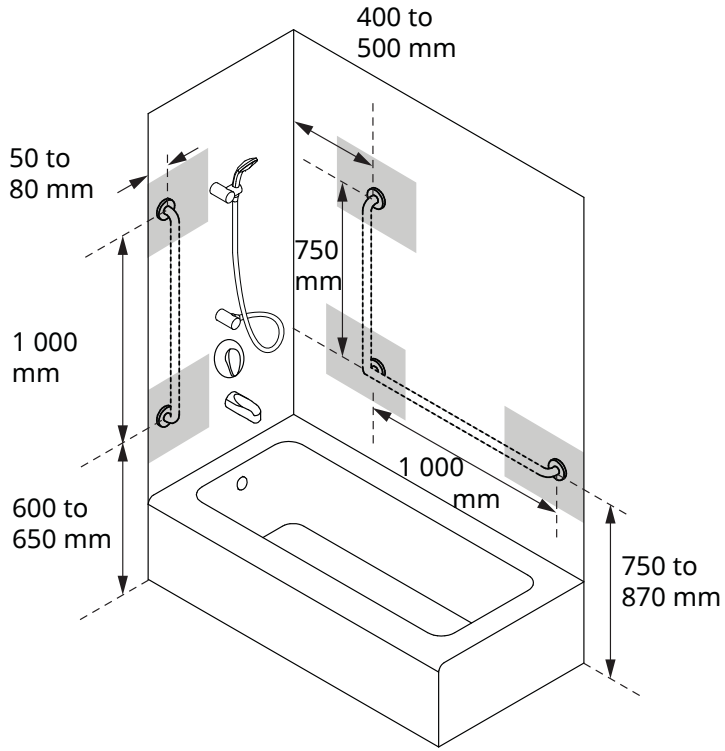

Figure A-3.8.5.5.
Adaptable dwelling unit bathtubs

1) The bathroom referred to in Sentence 3.8.5.4.(1) shall be designed to be adaptable for use by persons using wheelchairs by providing

Attributions [F75-OA1]
Attributions [F75-OA2]

a) a dimension from the front edge of the water closet to the facing wall of not less than 800 mm,

b) a dimension from the front face of the bathtub or shower to the centre line of the water closet not less than 510 mm, and

c) a clear floor space in front of the lavatory not less than 760 mm wide by 1 350 mm deep centred on the lavatory, and

d) a clear floor space, exclusive of door swing, not less than 760 mm wide by 1 350 mm deep connecting to the route through the doorway.

2) Walls adjacent to the water closet and bathtub or shower shall accommodate the future installation of grab bars conforming to

Attributions [F74-OA2]

a) Clauses 3.8.3.11.(1)(e) and (f) for water closets, and

b) Clause 3.8.3.16.(1)(f) for showers or 3.8.3.17.(1)(f) for bathtubs.

(See Note A-3.8.5.5.(2).)

A-3.8.5.5.(2) Grab Bar Installation. This provision is intended to ensure there is adequate backing for the installation of grab bars by the occupant of the adaptable dwelling unit in the future. For example, plywood or solid lumber behind the wall finish and encompassing the location of future grab bars located as described in Clause 3.8.3.11.(1)(e) and Clause 3.8.3.16.(1)(f) or 3.8.3.17.(1)(f) would provide suitable backing for the grab bar fasteners.

Figure 3.8.5.5. shows a clear area for maneuverability in an adaptable dwelling unit bathroom. The clear floor area is exclusive of the door swing and provides a useable route to all fixtures.

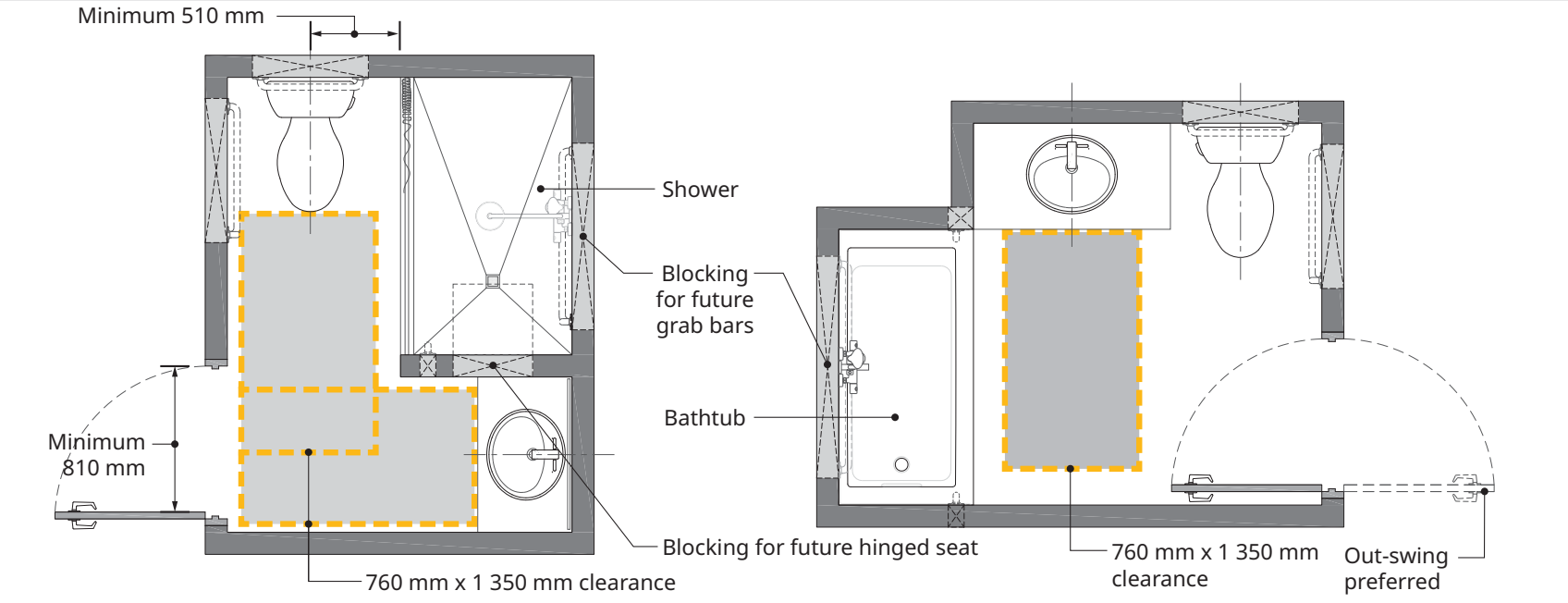

Figure 3.8.5.5. – Clear floor area in a bathroom

3.8.5.6. Adaptable Dwelling Unit Kitchens

1) The kitchen in an *adaptable dwelling unit* shall be designed so that the *cooktop* and sink are adjacent or can have a continuous counter between them.

Attributions [F75-OA2]

3.8.5.7. Controls, Switches and Outlets

1) Controls and switches intended for occupant use, including electrical, telephone, cable and data outlets shall be mounted 455 mm to 1 200 mm above the floor.

Attributions [F75-OA2]

Only the British Columbia Building Code content directly related to accessibility is reproduced in this handbook.

Section 3.2. Building Fire Safety

3.2.4. Fire Alarm and Detection Systems

(See Note A-3.2.4.)

3.2.4.19. Visible Signal Devices and Visible Warning Systems

Article 3.2.4.19. is reorganized in the British Columbia Building Code 2018 to distinguish between scenarios where a fire alarm system is or is not provided.

Audible emergency warnings, i.e., the fire alarm system or the smoke alarm, may not be effective for people who are deaf or hard of hearing. The required visible signal devices and visible warning systems can alert people who are deaf or hard of hearing to an emergency even when they are sleeping.

1) Visible signal devices shall be installed in addition to *alarm signals*

a) in *buildings* or portions thereof intended for use primarily by persons who are deaf or hard of hearing,

b) in *assembly occupancies* in which music and other sounds associated with performances could exceed 100 dBA,

c) in any *floor area* in which the ambient noise level is more than 87 dBA, and

d) in any *floor area* in which the occupants

i) use ear protection devices,

ii) are located in an audiometric booth, or

iii) are located in sound-insulating enclosures.

Attributions [F11-OS1.5]

Intent: To limit the probability that people who are deaf or hard of hearing will not be promptly notified of a fire situation, which could lead to delays in evacuation or moving to a safe place, which could lead to harm [Clauses 3.2.4.19.(1)(a) and 3.2.4.19.(1)(d)]

Intent: To limit the probability that people will not hear or distinguish fire alarm signals from ambient noises and will not be promptly notified of a fire situation, which could lead to delays in evacuation or moving to a safe place, which could lead to harm [Clauses 3.2.4.19.(1)(b) and 3.2.4.19.(1)(c)]

Visual signals conforming to this Article should be installed in occupancies or parts of occupancies where people who are deaf or hard of hearing may be employed.

2) Visible signal devices required by Sentence (1) shall be installed so that the signal from at least one device is visible throughout the *floor area* or portion thereof in which they are installed. (See Note A-3.2.4.19.(2).)

Attributions [F11-OS1.5]

Intent: To limit the probability that people relying on visual information to warn them of an emergency situation will not be promptly notified of a fire situation, which could lead to delays in evacuation or moving to a safe place, which could lead to harm.

3) A visible warning system shall be installed in the rooms and spaces required by Section 3.8. and shall conform to

a) Sentence (4) where a fire alarm system is provided, or

b) Sentence (5) where a fire alarm system is not provided.

4) The visible warning system required by Sentences (3) shall consist of strobe lights conforming to CAN/ULC-S526, "Visible Signal Devices for Fire Alarm Systems, Including Accessories" that are designed to operate as part of the fire alarm system, and

Attributions [F11,F81-OS1.5]

a) have a luminous intensity of not less than

i) 75 candela, if the strobe light is located in a sleeping room or bed space, or

ii) 15 candela, if the strobe light is not located in a sleeping room or bed space,

b) produce between 1 and 3 flashes per second, with the flashes synchronized when more than one strobe light is visible from a single location,

c) have a clear or white translucent lens with the word "FIRE" clearly visible on the

i) lens, or

ii) attached nameplate,

d) be installed in each

i) sleeping room or bed space,

ii) room closed off from the living area by a door including bathrooms, and

iii) living area or hallway serving the living area, and

e) be located in conformance with the installation requirements for visible signal devices in CAN/ULC-S524, "Installation of Fire Alarm Systems."

5) Where a fire alarm system is not provided, the visible warning system required by Sentence (3) shall consist of strobe lights conforming to CAN/ULC-S526, "Visible Signal Devices for Fire Alarm Systems, Including Accessories" that shall

Attributions [F11,F81-OS1.5]

a) be connected to, and activated by,

i) the *smoke alarms* required by Article 3.2.4.20. and Article 9.10.19.1., or

ii) the *smoke detectors* permitted by Article 3.2.4.20., 3.2.4.21. or 9.10.19.8.,

b) have a luminous intensity of not less than

i) 75 candela, if the strobe light is located in a sleeping room or bed space, or

ii) 15 candela if the strobe light is not located in a sleeping room or bed space,

c) produce between 1 and 3 flashes per second, with the flashes synchronized when more than one strobe light is visible from a single location,

d) have a clear or white translucent lens with the word "SMOKE" clearly visible on the

i) lens, or

ii) attached nameplate,

e) be installed in each

i) sleeping room or bed space,

ii) room closed off from the living area by a door including bathrooms, and

iii) living area or hallway serving the living area, and

f) be located not less than 2 100 mm above the floor on a wall or ceiling in a location that will maximize effectiveness.

Strobe lights must be brighter if the strobe lights are expected to wake occupants. As well, if more than one strobe light is visible from a single location, flashes must be synchronized to reduce negative effects on occupants. Bathrooms are not exempt from the required locations.

It is important for the occupants to know if the flashing of the strobe light has been activated by the building's fire alarm system or by the smoke alarm located in their suite. This information is conveyed by a small indicator light which must be located so as not to confuse the occupant. The indicator light can be immediately adjacent to every strobe light required in the suite and identified with a sign reading "SMOKE", it can be on the smoke alarm, i.e., integral with the unit, or it can be immediately adjacent to the smoke alarm with no separate identification being necessary.

Regardless of which method is used to indicate an emergency condition, it is recommended that building management provide staff training on this and other warning systems and that occupants, particularly in hotels, motels and similar accommodations, are fully informed of the locations and functions of such systems.

Figure A-3.8.3.22. in the Notes illustrates a residential suite and shows locations for strobe lights that meet Code requirements and their connection to both the fire alarm system (when a fire alarm system is provided) and the suite's smoke detector.

6) The special outlet boxes and cover plates required by Sentences 3.8.2.12.(5) and 3.8.5.3.(4) shall be

a) designed, located and wired specifically to allow strobe lights to operate in conformance with

i) Sentence (4) where a fire alarm system is provided, or

ii) Sentence (5) where a fire alarm system is not provided,

b) permanently identified as "FIRE – Strobe Light Connection Only," and

c) installed in each

i) sleeping room or bed space,

ii) room closed off from the living area by a door including bathrooms, and

iii) living area or hallway serving the living area.

7) For the purposes of providing power to the strobe lights that may be connected to the outlets described in Sentence (6), it shall be assumed that the total special outlets for at least 20 percent of the *dwelling units* in the *building* are in use.

In apartment buildings designed as senior citizens' residences it may be difficult to anticipate which suites and how many may be required to have strobe lights to serve the tenants who may be deaf or hard of hearing. Although every suite is required to be wired for strobe lights, to avoid excessive loading in the fire alarm power supply, the load necessary to serve 20 percent of the suites in the building is the minimum that shall be considered when sizing the power supply. It is recommended that a higher percentage be used wherever possible.

3.2.4.22. Voice Communication Systems

6) Visible signal devices required by Sentence 3.2.4.19.(1) and visible warning systems required by Sentence 3.2.4.19.(3) shall continue to emit a visible signal while voice instructions are being transmitted.

Attributions [F11-OS1.5]

Intent: To limit the probability that people relying on visual information to warn them of an emergency situation will receive confusing information, which could lead to delays in evacuation or moving to a safe place, which could lead to harm.

Only the British Columbia Building Code content directly related to accessibility is reproduced in this handbook.

Section 3.3. Safety within Floor Areas

3.3.1. All Floor Areas

3.3.1.7. Protection on Accessible Floor Areas

The 2018 edition of the British Columbia Building Code moves requirements for protected egress from floor areas that were previously found in Article 3.8.3.19. of the 2012 edition to Article 3.3.1.7.

1) Every *floor area* that is not *sprinklered* throughout and that has an *accessible* path of travel shall

a) be served by an elevator

i) conforming to Sentences 3.2.6.5.(4) to (6),

ii) protected against fire in conformance with Clauses 3.2.6.5.(3)(b) or (c), and

iii) in a *building* over 3 *storeys* in *building height*, protected against smoke movement so that the hoistway will not contain more than 1% by volume of contaminated air from a fire floor during a period of 2 h after the start of a fire, assuming an outdoor temperature equal to the January design temperature on a 2.5% basis determined in conformance with Subsection 1.1.3.,

b) be divided into at least 2 zones by *fire separations* conforming to Sentences (2), (3) and 3.1.8.5.(6) so that

i) *persons with disabilities* can be accommodated in each zone, and

Attributions [F10,F05-OS1.5]

Intent: To limit the probability that people will not be protected or will be delayed in evacuating or moving to a safe place in a fire situation, which could lead to harm.

Intent: To expand the application of Sentences 3.2.6.5.(4) to 3.2.6.5.(6), Clauses 3.2.6.5.(3)(b) and 3.2.6.5.(3)(c), and Sentence 3.4.2.5.(1).

Intent: To state the applications of Sentences 3.3.1.7.(2) to 3.3.1.7.(4).

Attributions (a) [F06-OS1.5]

Intent: To limit the probability that emergency responders will be delayed or ineffective in carrying out their fire emergency response operations, which could lead to delays in the evacuation or movement of people to a safe place, which could lead to harm to people, including emergency responders.

Intent: To expand the application of Sentences 3.2.6.5.(4) to 3.2.6.5.(6), Clauses 3.2.6.5.(3)(b) and 3.2.6.5.(3)(c), and Sentence 3.4.2.5.(1).

Intent: To state the applications of Sentences 3.3.1.7.(2) to 3.3.1.7.(4).

ii) the travel distance from any point in one zone to a doorway leading to another zone shall be not more than the value for travel distance permitted by Sentence 3.4.2.5.(1) for the *occupancy* classification of the zone,

(See also Sentence 3.1.8.5.(6) for requirements regarding the passage of smoke.)

c) in the case of *residential occupancies*, be provided with balconies conforming to Sentence (4),

d) have an *accessible* exterior *exit* at ground level, or

e) have a ramp conforming to Subsection 3.8.3. leading to ground level.

(See Note A-3.3.1.7.(1).)

A-3.3.1.7.(1) Temporary Refuge for Persons with Disabilities. These measures are intended to provide temporary refuge for persons with disabilities. It is acknowledged, however, that the measures cannot provide absolute safety for all occupants in the fire area. It may, therefore, be necessary to develop special arrangements in the fire safety plan to evacuate persons with disabilities from these areas. Details for a suitable plan are contained in the British Columbia Fire Code.

The protected elevator referred to in Clause 3.3.1.7.(1)(a) is intended to be used by firefighters as a means for evacuating persons with disabilities. It is not intended that this elevator be used by persons with disabilities as a means of egress without the assistance of firefighters.

If an estimate is to be made of the number of persons with disabilities in a floor area who can be accommodated in each zone in Clause 3.3.1.7.(1)(b), this estimate may be based on Table 3.8.2.3., which is used to determine the minimum number of spaces to be provided for persons using wheelchairs in fixed seating areas. If more precise information is available, it should be used for sizing the zones.

For residential occupancies, the choices of protection include the option to provide an accessible balcony, but it is not required that balconies be the chosen means of protection.

Figure 3.3.1.7.-A shows a protected elevator described in Subclause 3.3.1.7.(1)(a)(ii).

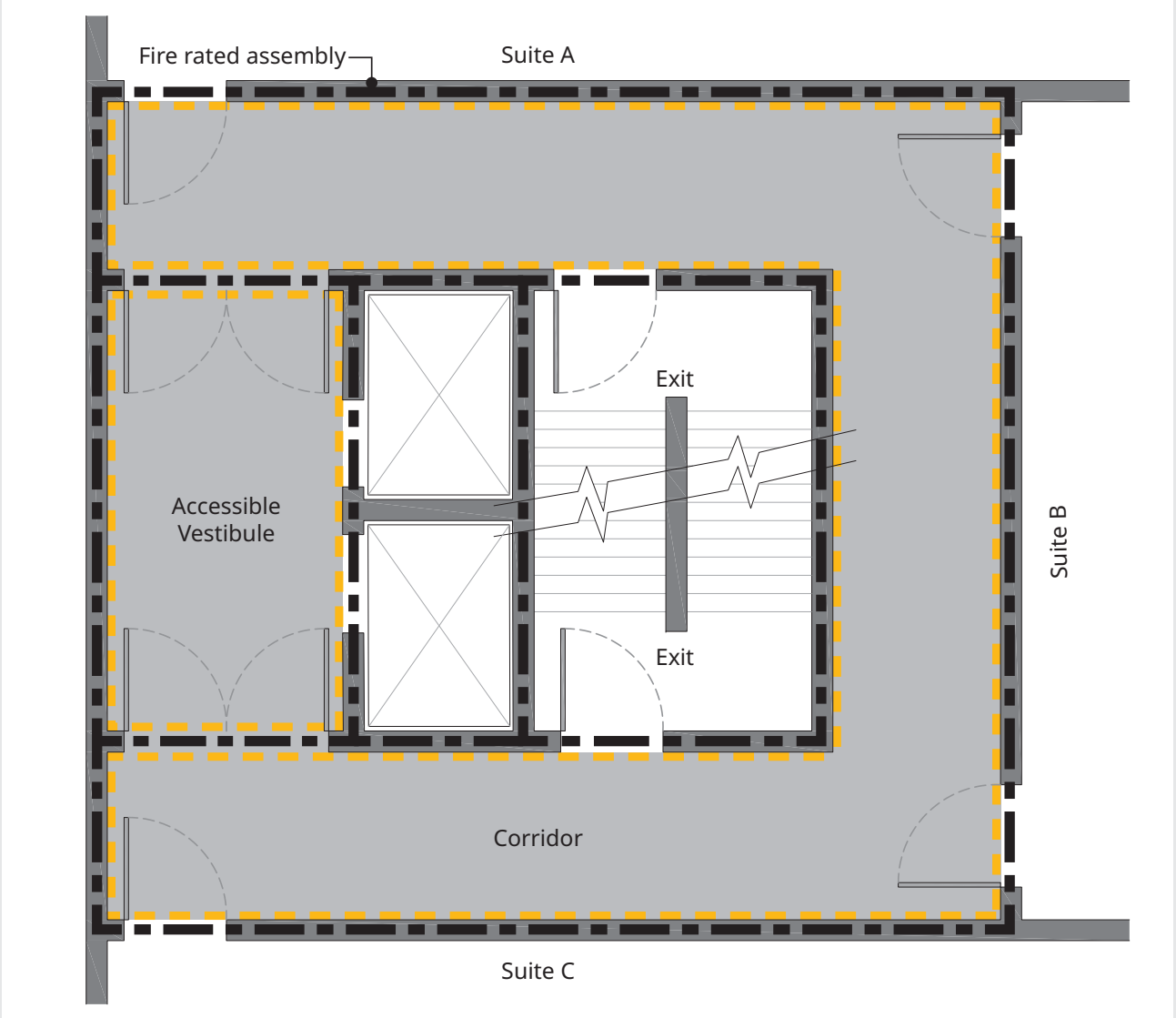

Figure 3.3.1.7.-A
Protected elevator

Figure 3.3.1.7.-B shows a floor area divided into two zones described in Clause 3.3.1.7.(1)(b).

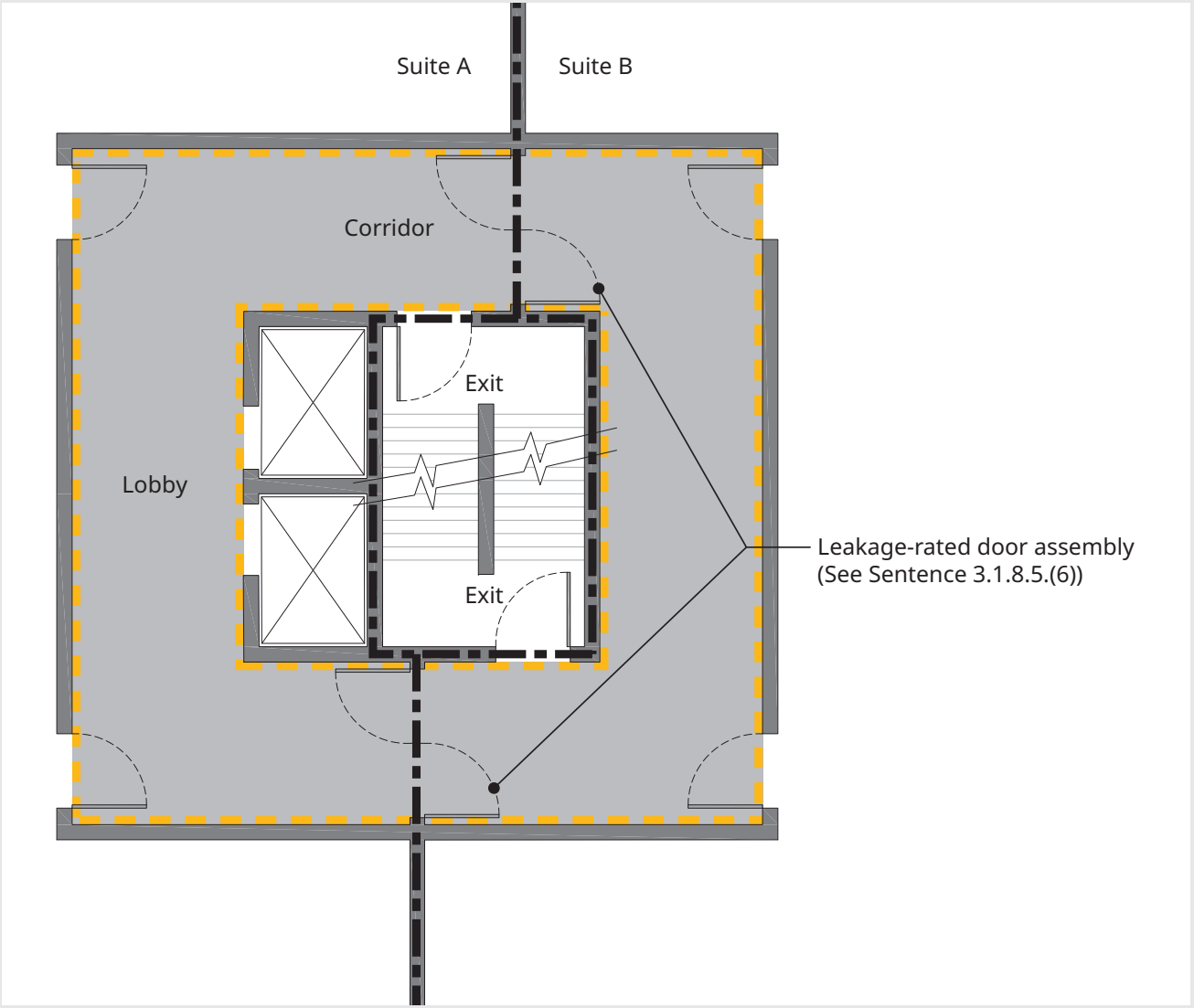

Figure 3.3.1.7.-B
Divided floor area

The British Columbia Building Code 2018 contains new requirements for leakage-rated door assemblies (found in Sentence 3.1.8.5.(6)) that pertain to the doors in the fire separations that divide the zones described in Clause 3.3.1.7.(1)(b). The leakage rate of the door assembly shall be determined in accordance with ANSI/UL-1784-04, Air Leakage Tests of Door Assemblies and Other Opening Protectives (per Sentence 3.1.8.4.(4)) and be installed in accordance with NFPA 105-2013, Smoke Door Assemblies and Other Opening Protectives.

Sentence 3.1.8.7.(2) also requires smoke dampers and combination smoke/fire dampers that penetrate the fire separations that divide the zones described in Clause 3.3.1.7.(1)(b) to conform to the new Article 3.1.8.11. on the installation of smoke dampers, unless waived by Sentence 3.1.8.9.(2).

For buildings that are provided with a fire alarm system, Sentence 3.1.8.14. requires hold-open devices on doors in fire separations that divide the zones described in Clause 3.3.1.7.(1)(b) to release upon a signal from a smoke detector (that is connected to the fire alarm system).

The Code requirements for these references are not reproduced in this handbook.

The pointer to Sentence 3.1.8.5.(6) following the direct reference in Clause 3.3.1.7.(1)(b) is repeated for Code users who may be familiar with a requirement of previous editions for weather-stripping which, in the 2018 edition, is specific to restricting the passage of smoke.

Note A-3.3.1.7.(1) has added clarification that residential occupancies have choices of protection that include the option of providing an accessible balcony. Sentence (4) does not require residential occupancies to have access to balconies. Figure 3.3.1.7.-C shows the accessible residential balcony option. Only residential occupancies may select balconies as an option for protection.

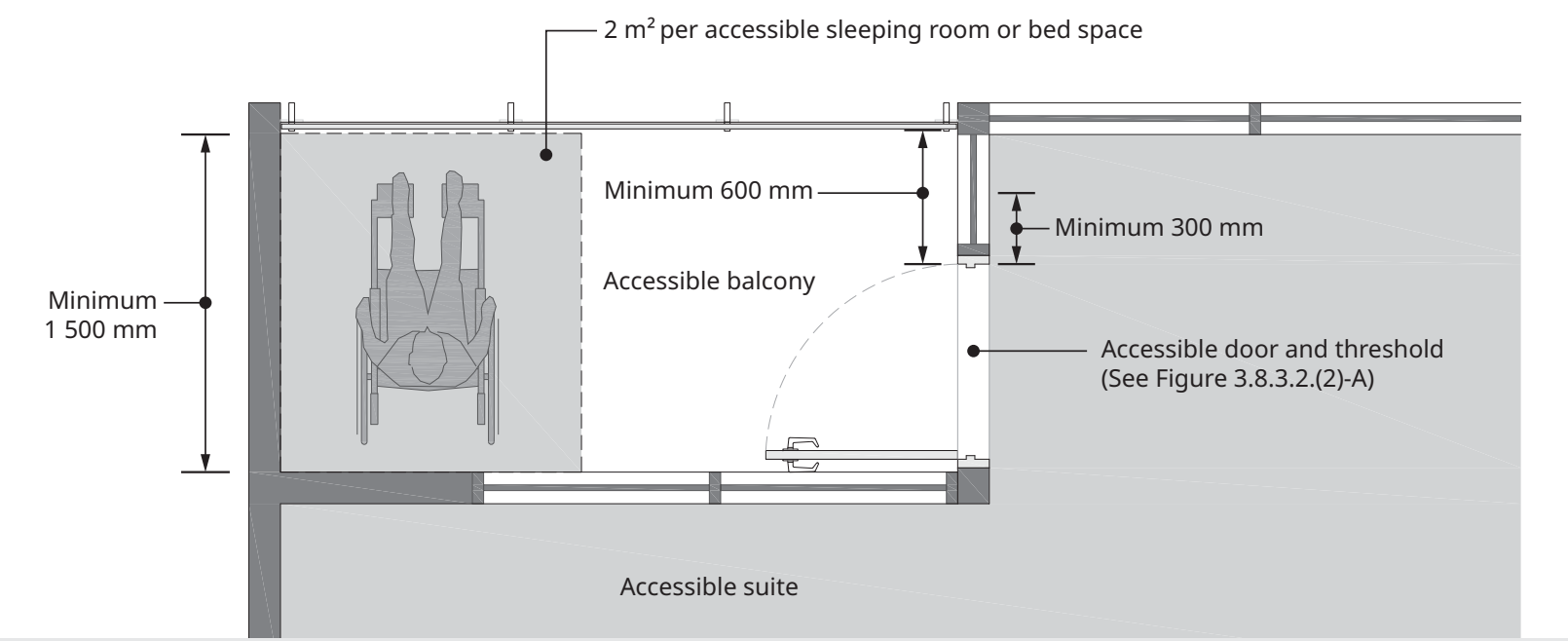

Figure 3.3.1.7.-C
Residential balcony

These egress requirements are intended to provide temporary refuge for people with mobility challenges. It is acknowledged that the measures cannot provide absolute safety for all occupants in the area. It may be necessary for the fire safety plan to develop special arrangements to evacuate people from these areas. Details on fire safety plans are contained in the British Columbia Fire Code.

The protected elevator referred to in Clause 3.3.1.7.(1)(a) is intended to be used by firefighters as a means for assisting people in the event of an evacuation. It is not intended that this elevator be used by people as a means of egress without the assistance of firefighters.

Sizing the zones should be based on the best estimate of how many people may require assistance. The number of accessible spaces in seating areas may be considered as part of the estimate.

2) Except as permitted by Sentence (3), the *fire separations* referred to in Clause (1)(b) shall have a *fire-resistance rating* not less than 1 h.

Attributions [F03-OS1.2] [F06-OS1.5]

Intent: To limit the probability that fire will spread from one zone to another zone of the floor area, which could lead to harm to people in the other zone.

Intent: To limit the probability that fire will spread from one zone to another zone of the floor area, which could lead to fire emergency response operations involving the other zone being delayed or ineffective, which could lead to delays in the evacuation or movement of people to a safe place, which could lead to harm.

3) The *fire-resistance rating* of the *fire separations* referred to in Clause (1)(b) is permitted to be less than 1 h but not less than 45 min provided the *fire-resistance rating* required by Subsection 3.2.2. is permitted to be less than 1 h for

Intent: To supersede the requirements of Sentence 3.3.1.7.(2) and permit a lower minimum fire-resistance rating on the basis that the rating of the separation need not be any more than that of the other assemblies that enclose the zone.

a) the floor assembly above the *floor area*, or

b) the floor assembly below the *floor area*, if there is no floor assembly above.

4) A balcony required by Clause (1)(c) shall

a) have direct *access* from the suite or *floor area*

b) be not less than 1.5 m deep from the outside face of the exterior wall to the inside edge of the balcony, and

c) provide not less than 2 m² of balcony space for each *accessible* sleeping room or bed space.

Attributions (a) [F10,F73-OS1.5]

Intent: To limit the probability that people using a manual wheelchair or other manual mobility assistance device will be delayed in moving to a safe place [balcony] in a fire situation, which could lead to harm.

Attributions (b),(c) [F10-OS1.5]

Intent: To limit the probability of insufficient space on balconies to accommodate people using manual wheelchairs or other manual mobility assistance devices in the floor area in a fire situation, which could lead to delays in moving to a safe place [balcony], which could lead to harm.

5) The *floor area* on either side of a *horizontal exit* conforming to Article 3.4.6.10. is permitted to be considered as a zone in applying the requirements of Clause (1)(b).

3.3.1.13. Doors and Door Hardware

1) Except as required by Article 3.3.3.4., a door that opens into or is located within a *public corridor* or other facility that provides *access to exit* from a *suite* shall

a) provide a clear opening of not less than 800 mm if there is only one door leaf,

b) in a doorway with multiple leaves, have the active leaf providing a clear opening of not less than 800 mm,

c) not open onto a step, and

d) have a threshold conforming to Sentence (11), except where it

i) is used to confine the spillage of *flammable liquids* within a *service room* or within a room in an *industrial occupancy*, or

ii) provides access to an exterior balcony, unless the balcony is required by Clause 3.3.1.7.(1)(c).

Attributions (a) and (b) [F10,F12-OS3.7]

Intent: To limit the probability that door openings will be of insufficient size to permit the efficient evacuation or movement of people to a safe place in an emergency situation, which could lead to delays in the evacuation or movement of people to a safe place, which could lead to harm.

Intent: To limit the probability that door openings will be of insufficient size in an emergency situation, which could lead to delays or inefficiencies in emergency response operations, which could lead to delays in the evacuation or movement of people to a safe place, which could lead to harm.

Attributions (c) [F10-OS3.7] [F30-OS3.1]

Intent: To limit the probability that people passing through the door will have difficulty in negotiating a step at the doorway, which could lead to delays in the evacuation or movement of people to a safe place, which could lead to harm.

Intent: To limit the probability that people passing through the door will trip at the step, which could lead to harm.

Attributions (d) [F30-OS3.1]

Intent: To limit the probability that people passing through the door will have difficulty in negotiating a step at the doorway, which could lead to delays in the evacuation or movement of people to a safe place, which could lead to harm.

2) Except as provided in Sentences (6) and (7), a door in an *access to exit* shall be readily openable in travelling to an *exit* without requiring keys, special devices or specialized knowledge of the door-opening mechanism.

Attributions [F10-OS3.7]

Intent: To limit the probability that people will not be familiar with the release hardware of doors in an access to exit, or will not have the proper opening device [e.g. keys], which could lead to delays in the evacuation or movement of people to a safe place, which could lead to harm.

3) Except as permitted by Sentence (4), door release hardware shall comply with Clause 3.8.3.8.(1)(c) and the door shall be openable with not more than one releasing operation. (See also Sentence 3.8.3.6.(4).)

Attributions [F10-OS3.7]

Intent: To limit the probability that people will be delayed in operating the release hardware of doors in an access to exit, which could lead to delays in the evacuation or movement of people to a safe place, which could lead to harm.

4) An egress door from an individual *dwelling unit* or from a *suite* of *residential occupancy* is permitted to be provided with additional devices that require a releasing operation additional to the main door release hardware, provided the devices are readily operable from the inside without the use of keys, special devices or specialized knowledge. (See Note A-3.3.1.13.(4).)

Attributions [F10-OS3.7]

Intent: To supersede the requirements of Sentence 3.3.1.13.(3), which would otherwise require one-hand, one-action release hardware on doors, and permit additional releasing devices on doors in certain occupancies, on the basis that:

- the occupants are expected to be familiar with the release hardware, and
- the opening devices are readily operable from the inside without the use of keys, special devices or specialized knowledge.

This is to limit the probability of delays in the evacuation or movement of people to a safe place in an emergency situation, which could lead to harm.

5) Except as provided in Sentence 3.4.6.17.(9), door release hardware shall be installed between 900 mm and 1 100 mm above the finished floor.

Attributions [F10-OS3.7]

Intent: To limit the probability that the door release hardware will be located excessively high above the floor level, which could lead to people being unable to easily reach the hardware in an emergency situation, which could lead to delays in opening the door, which could lead to delays in the evacuation or movement of people to a safe place, which could lead to harm.

Attributions [F73-OA1]

Intent: To limit the probability that the door release hardware will be located excessively high above the floor level, which could lead to people using a manual wheelchair or other manual mobility assistance device being unable to reach the hardware, which could lead to the inability to open the door without the assistance of another person.

6) An egress door in an *access to exit* serving a *contained use area* or an *impeded egress zone* is permitted to be equipped with locking devices, provided they can be released either locally or remotely in conformance with Sentence (8) or (9). (See Note A-3.3.1.13.(6).)

Intent: To exempt doors in certain occupancies from the requirements of Sentences 3.3.1.13.(2) and 3.4.6.16.(1) to be readily openable, on the basis that the doors can be released locally or remotely by trained staff.

Intent: To state the application of Sentences 3.3.1.13.(8) and 3.3.1.13.(9).

7) A door in an *access to exit* is permitted to be equipped with an electromagnetic lock conforming to Sentence 3.4.6.16.(4) or (5).

Intent: To supersede the requirements of Sentence 3.3.1.13.(2), which would otherwise not permit the use of locking devices, and permit electromagnetic locks on doors in access to exit doors if conditions of Sentences 3.4.6.16.(4) or 3.4.6.16.(5) are met.

Intent: To state the application of Sentences 3.4.6.16.(4) or 3.4.6.16.(5) for doors in access to exit.

8) Local locking devices permitted by Sentence (6) shall be operable by a key from both sides of the door.

Attributions [F12-OS3.7]

Intent: To limit the probability that security personnel will be unable to operate the door release hardware from either side of the door in an emergency situation, which could lead to people being trapped in a contained use area or an impeded egress zone, which could lead to delays in the evacuation or movement of people to a safe place, which could lead to harm.

9) Controls for the remote release of door locking devices permitted by Sentence (6) shall be located in an area readily available to security personnel.

Attributions [F12-OS3.7]

Intent: To limit the probability that security personnel will be delayed in locating and operating the door release hardware in an emergency situation, which could lead to people being trapped in a contained use area or an impeded egress zone, which could lead to delays in the evacuation or movement of people to a safe place, which could lead to harm.

10) Locking devices permitted by Sentence (6) that are electrically operated shall be

a) designed to operate on emergency power, and

b) capable of manual release by security personnel.

Attributions [F12-OS3.7]

Intent: To limit the probability that the loss of normal power or the failure of the electrically operated locking devices will not allow security personnel to operate the door release hardware in an emergency situation, which could lead to people being trapped in a contained use area or an impeded egress zone, which could lead to delays in the evacuation or movement of people to a safe place, which could lead to harm.

Intent: To state the application of Sentence 3.4.6.16.(5) for doors in access to exit.

11) Except in locations described in Subclauses (1)(d)(i) and (ii), in doorways, where the threshold is not flush with the floor, the threshold shall be not more than 13 mm higher than the finished floor surface, and where it is higher than 6 mm, shall be beveled to a slope no steeper than 1 in 2.

Attributions [F30-OS3.1]

12) Door assemblies providing *access* shall be designed in accordance with Subsection 3.8.3.

The design requirements for thresholds in Sentence (11) are aligned with the design requirements for thresholds in Subsection 3.8.3. These requirements apply to all buildings to support safety in use and minimize tripping and other injury risks.

Design requirements for doors providing access are found in Subsection 3.8.3.

Only the British Columbia Building Code content directly related to accessibility is reproduced in this handbook.

Section 3.4. Exits

3.4.6. Types of Exit Facilities

3.4.6.3. Maximum Vertical Rise of Stair Flights and Required Landings

1) No *flight* of stairs shall have a vertical rise of more than 3.7 m between floors or landings, except that a *flight* of stairs serving as an *exit* in a Group B, Division 2 *occupancy* shall have a vertical rise of not more than 2.4 m between floors or landings.

Attributions [F10-OS3.7]

Intent: To limit the probability that people using exit stairs in a emergency situation will require a rest, or will develop a psychological fear of falling, which could lead to delays in the evacuation or movement of people to a safe place, which could lead to harm.

Intent: To exempt exit stairs serving Group B, Division 2 occupancies from the requirements in the first part of Sentence 3.4.6.3.(1), which would otherwise permit a vertical rise of the stairs of up to 3.7 m, and limit the rise to not more than 2.4. m, on the basis that:

- occupants may be in a poor state of health and may need to rest more frequently, and
- staff moving patients may require intervals of resting.

2) Except as provided in Sentence (3), a landing shall be provided

a) at the top and bottom of each *flight* of interior and exterior stairs,

b) at the top and bottom of every section of ramp,

c) where a doorway opens onto a stair or ramp,

d) where a ramp opens onto a stair, and

e) where a stair opens onto a ramp.

Attributions [F10-OS3.7] [F30-OS3.1]

Intent: To limit the probability of an inadequate clear surface for users to adjust their gait when entering or exiting a flight of stairs or ramps, or for users to turn to negotiate a doorway in a stairway, which could lead to:

- people falling, and
- people falling in an emergency, which could lead to delays in the evacuation or movement of people to a safe place.

This is to limit the probability of harm.

3) A landing may be omitted at the bottom of an exterior stair or ramp, provided there is no gate, door or fixed obstruction within the lesser of

a) the width of the stair or ramp, or

b) 1 100 mm.

Attributions [F10,F12-OS3.7] [F30-OS3.1]

Intent: To exempt certain stairs or ramps from the application of Article 9.8.6.2. and Sentence 3.4.6.3.(2), which would otherwise require a landing, in situations where an approach to the stair or ramp with a safer configuration is provided.

4) Landings required at the top of a *flight* of stairs shall be provided with tactile walking surface indicators conforming to Subsection 3.8.3. unless the stairs are

Attributions [F30-OS3.1]

a) stairs within *dwelling units* or serving not more than two *dwelling units*,

b) *exit* stairs not normally used for access purposes, or

c) fire escape stairs.

The 2018 edition of the British Columbia Building Code refers to tactile walking surface indicators to align with common industry terms rather than the term tactile warning strips. Requirements for tactile walking surface indicators are expanded to include multi-unit residential buildings.

The 2012 edition of the British Columbia Building Code located the Sentence (4) requirement in Sentence 3.4.6.8.(11).

3.4.6.8. Treads and Risers

2) Steps for stairs referred to in Sentence (1) shall

a) have a rise between successive treads not less than 125 mm and not more than 180 mm,

b) have a closed riser, and

c) have

i) a riser with either no rakeback or a rakeback of not more than 38 mm, or

ii) if a nosing is provided, the underside of the nosing with an angle of not less than 60° from the horizontal.

Attributions [F10-OS3.7] [F30-OS3.1]

Intent: To limit the probability that steps for stairs will be designed with an improper rise dimension [i.e. rise is too high or too low], which could lead to difficulties in movement in an emergency situation, which could lead to delays in the evacuation or movement of people to a safe place, which could lead to harm.

Intent: To limit the probability that steps for stairs will be designed with an improper rise dimension [i.e. rise is too high or too low], which could lead to people tripping or falling, which could lead to harm.

3) Except as provided in Article 3.3.4.7. and except for fire escape stairs, stairs that are primarily used for maintenance and service, and stairs that serve *industrial occupancies* other than *storage garages*, steps for stairs shall have no open risers.

Attributions [F10-OS3.7] [F30-OS3.1]

Intent: To limit the probability that because of the absence of a solid riser

- people using leg braces or prosthetic devices will not be able to guide their foot up over the riser to the next step and
- people using canes or crutches will not be able to place them against the riser to maintain balance

which could lead to inefficient movement in an emergency situation, which could lead to delays in the evacuation or movement of people to a safe place, which could lead to harm.

Intent: To limit the probability that because of the absence of a solid riser

- people using leg braces or prosthetic devices will not able to guide their foot up over the riser to the next step and
- people using canes or crutches will not be able to place them against the riser to maintain balance

which could lead to people falling, which could lead to harm.

Attributions [F73-OA1]

Intent: To limit the probability that because of the absence of a solid riser

- people using leg braces or prosthetic devices will not able to guide their foot up over the riser to the next step and
- people using canes or crutches will not be able to place them against the riser to maintain balance which could lead to people not being able to circulate within a building without the assistance of another person.

8) The top of the nosing of stair tread shall

a) except as permitted in Sentence (10), have either a radius or a bevel between 6 mm and 10 mm in horizontal dimensions,

b) have no abrupt angles on the underside, and

c) not project more than 38 mm.

Attributions [F30-OS3.1]

Intent: To limit the probability that people tripping and falling against the nosing of a stair tread will be harmed.

Intent: To limit the probability that people using the stairway will catch their heel or toe on the nosing of a stair tread, which could lead to people tripping or falling, which could lead to harm.

Open risers can be hazardous to some occupants. People who use leg braces or prosthetic devices can benefit from a solid riser to guide the foot up over the riser to the next step and to maintain balance. People who use canes or crutches may place them against the riser of the next step above the one they are on.

Nosing with sharp or abrupt angles prevent guiding of the foot along the riser and may cause tripping.

Figure 3.4.6.8.(2) shows rakebacks and nosing angles on stairs.

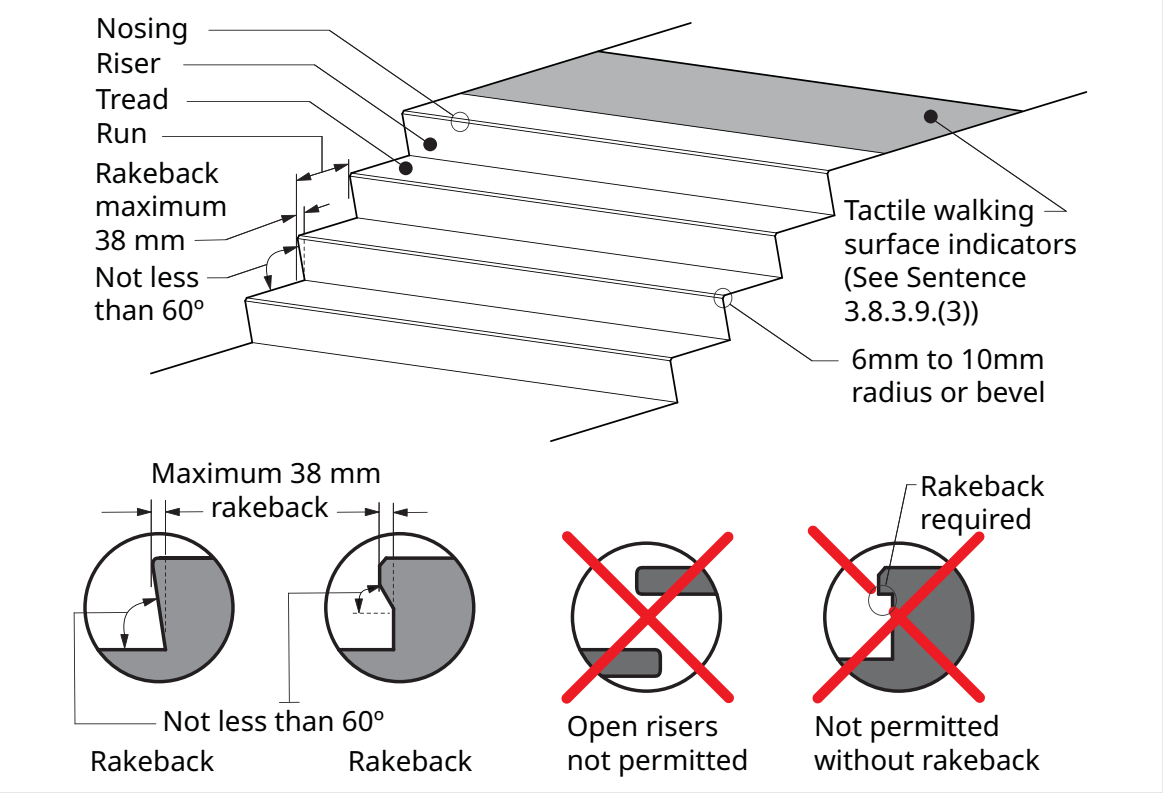

Figure 3.4.6.8.(2)
Stair design

3.4.6.16. Door Release Hardware

1) Except for devices on doors serving a *contained use area* or an *impeded egress zone* designed to be remotely released in conformance with Article 3.3.1.13., and except as permitted by Sentences (4) and (5) and Article 3.4.6.17., locking, latching and other fastening devices on a principal entrance door to a *building* as well as those on every *exit* door shall include release hardware complying with Clause 3.8.3.8.(1)(c) to permit the door to be readily opened from the inside with not more than one releasing operation and without requiring keys, special devices of specialized knowledge of the door-opening mechanism. (See Note A-3.4.6.16.(1).)

Attributions [F10-OS3.7]

Intent: To limit the probability of delays in opening principal entrance doors and exit doors in an emergency situation, which could lead to delays in the evacuation or movement of people to a safe place, which could lead to harm.

Intent: To expand the application of Sentences 3.3.1.13.(6) to 3.3.1.13.(9).

6) Except as provided in Sentence 3.4.6.17.(9), door release hardware for the operation of the doors referred to in this Section shall be installed at a height between 900 mm and 1 100 mm above finished floor. (See also Subclause 3.8.3.6.(6)(a)(v).)

Attributions [F10-OS3.7]

Intent: To limit the probability that people will be unable to reach or properly operate door hardware, which could lead to delays in opening doors in an emergency situation, which could lead to delays in the evacuation or movement of people to a safe place, which could lead to harm.

Attributions [F73-OA1]

Intent: To limit the probability that people using a manual wheelchair or other manual mobility assistance device will be unable to reach or properly operate door hardware, which could lead to people not being able to circulate within a building without the assistance of another person.

Foot-operated hardware is a new requirement in the British Columbia Building Code 2018 and a pointer to Subclause 3.8.3.6.(6)(a)(v) has been added to alert designers. Foot-operated hardware is required in addition to the hardware requirements in Article 3.4.6.16. if the exit facility is required to be accessible.

Only the British Columbia Building Code content directly related to accessibility is reproduced in this handbook.

Section 3.5. Vertical Transportation

3.5.4. Dimensions and Signs

3.5.4.1. Elevator Car Dimensions

1) Except as permitted in Sentence (3), if one or more elevators are provided in a *building*, each *storey* with access to an elevator shall be served by at least one elevator which has inside dimensions that will accommodate and provide adequate access for a patient stretcher 2 010 mm long and 610 mm wide in the prone position. (See Note A-3.5.4.1.(1).)

Attributions [F12-OS3.7]

Intent: To limit the probability that an elevator will not be of sufficient size to accommodate a person in a stretcher in a prone position, which could lead to delays in providing medical services to the person, which could lead to harm.

A-3.5.4.1.(1) Elevator Car Dimensions. In some circumstances it is necessary to maintain a patient on a stretcher in the prone position during transit to a hospital or to treatment facilities. Inclining the stretcher to load it into an elevator could be fatal or at the very least detrimental to the patient's health. Many ambulance services use a mobile patient stretcher whose size is 2 010 mm long and 610 mm wide. As well as space for the stretcher in the elevator, there should be sufficient additional space for at least two attendants who may also be providing treatment during transit. Common elevator units that can satisfy this requirement include:

- a 1 134 kg elevator car with minimum interior dimensions of 2 032 mm wide and 1 295 mm deep with a right or left hand access door. The minimum access door width 1 067 mm and it must be on the 2 032 mm side of the car.
- a 1 134 kg elevator car with minimum interior dimensions of 2 032 mm deep and 1 295 mm wide with a minimum 915 mm wide access door located on the 1 295 mm side.

Limited-use/limited-application (LULA) elevators are limited by size, capacity, speed and rise and are not expected to meet the minimum elevator car dimensions stated in Sentence (1).

2) An elevator satisfying the requirements of Sentence (1) shall be clearly identified on the main entrance level of the *building*.

Attributions [F12-OS3.7]

Intent: To limit the probability that emergency responders will not be familiar with an elevator that is suitable for stretchers, which could lead to delays in providing medical services, which could lead to harm.

3) The requirement in Sentence (1) to accommodate and provide adequate access for a patient stretcher

a) is waived for a limited-use / limited-application elevator designed and installed in accordance with the Elevating Devices Safety Regulation, and

b) does not apply to a lift designed and installed in accordance with CAN/CSA-B355 "Lifts for Persons with Physical Disabilities".

Limited-use/limited-application (LULA) elevators are permitted in the British Columbia Building Code 2018 as passenger-elevating devices. The ASME A17.1-2010/CSA-B44-10, Safety Code for Elevators and Escalators standard permits LULA elevators to have smaller inside dimensions that may not accommodate a patient stretcher. Because LULA elevators are only permitted to travel short vertical distances, they are not relied upon the same way as other elevators, and not required to accommodate a patient stretcher.

Passenger lifts are distinct from elevators and Clause 3.5.4.1.(3)(b) provides clarity that they are outside the scope of the requirements of Article 3.5.4.1.

3.5.4.2. Floor Numbering

1) Arabic numerals indicating the assigned floor number shall be mounted permanently on both jambs of passenger elevator hoistway entrances in conformance with Appendix E of ASME A17.1/CSA B44, "Safety Code for Elevators and Escalators."

Attributions [F73-OA1]

Intent: To limit the probability that people with low vision using elevators will not be familiar with assigned floor numbers, which could lead to people not being able to circulate within a building without the assistance of another person.

Intent: To make Appendix E of CSA B44, "Safety Code for Elevators," mandatory for the design of elevators that are required to be accessible.

Only the British Columbia Building Code content directly related to accessibility is reproduced in this handbook.

Section 3.7. Health Requirements

3.7.2. Plumbing Facilities

3.7.2.3. Lavatories

1) Except as permitted by Sentence (2), at least one lavatory shall be provided in a room containing one or 2 water closets or urinals, and at least one additional lavatory shall be provided for each additional 2 water closets or urinals.

Attributions [F71-OH2.3]

Intent: To limit the probability of an insufficient number of lavatories, which could lead to the inability of people to use lavatories in a timely manner, which could lead to an inability to maintain personal hygiene, which could lead to harm.

2) Wash fountains in circular form are permitted to be provided in lieu of lavatories required by Sentence (1) provided each 500 mm of circumference is considered to be the equivalent of one lavatory.

Intent: To supersede the requirements of Sentence 3.7.2.3.(1), which would otherwise require lavatories, and permit the use of wash fountains, on the basis that such fountains provide an equivalent level of performance.

3) Any shelf or projection above a lavatory shall be located so that it will not be a hazard.

Attributions [F30-OS3.1]

Intent: To limit the probability that shelves or other projections will be improperly located above lavatories, which could lead to people hitting or bumping into the shelves or projections, which could lead to harm.

4) Lavatories required by Sentence (1) shall be equipped with faucets that

a) operate automatically, or

b) have a manual control that

i) complies with Clause 3.8.3.8.(1)(c),

ii) does not require the application of continuous force to maintain water flow, and

iii) where metered, provides at least 10 s of water flow.

Attributions [F71-OH2.3]

Intent: To limit the probability that people will not be able to wash their hands after using the washroom facilities without the assistance of another person, which could lead to unsanitary conditions, which could lead to harm.

The intention of Sentence (4) is that lavatory faucets are useable by all. The provision was edited to clarify which types of faucets serving a lavatory, in additional to handle types, meet the intent.

Figure 3.7.2.3.(4) shows examples of faucets with controls that are generally useable. The extra length of handles provides leverage to allow use with minimum pressure.

Faucets must be within reach of the user. The lavatory should be as close to the front of a vanity, as possible, while still maintaining the required clearances. Installing a single-lever faucet at the side of the lavatory provides general access.

Figure 3.7.2.3.(4)
Faucets

3.7.2.8. Grab Bars

1) Grab bars shall

a) be slip-resistant and free of any sharp or abrasive elements,

b) be mounted on surfaces that are free of any sharp or abrasive elements,

c) be able to resist a load of not less than 1.3 kN applied vertically or horizontally,

d) be 30 mm to 40 mm in diameter, and

e) where mounted on a wall, have a clearance of 35 mm to 45 mm from the wall.

Attributions [F20-OS3.1]

Intent: To limit the probability that the design of grab bars will be insufficient, which could lead to people having difficulty using the grab bars, which could lead to people slipping or falling, which could lead to harm.

3.7.2.9. Bathtubs

1) Where a bathtub is installed in a hotel or a motel, it shall

a) have a clear floor space at least 750 mm wide along its length, except that a water closet and a lavatory are permitted to project into this space provided they do not restrict access to the bathtub,

b) have faucets and other controls that conform to Clause 3.8.3.8.(1)(c),

c) have a slip-resistant bottom surface,

d) have grab bars that

i) conform to Sentence 3.7.2.8.(1),

ii) are not less than 1 200 mm long located vertically at the end of the bathtub that is adjacent to the clear floor space, with the lower end between 180 mm and 280 mm above the bathtub rim, and

iii) are not less than 1 200 mm long located horizontally along the length of the bathtub at 180 mm to 280 mm above the bathtub rim, and

e) be capable of being accessed along its full length with no tracks mounted on the bathtub rim.

Attributions [F74-OA2]

Intent: To limit the probability that a bathtub will not be provided for people using a manual wheelchair or other manual mobility assistance device, which could lead to people not being able to bathe without the assistance of another person.

Attributions 3.7.2.9.(1)(b) [F31-OS3.2]

Intent: To limit the probability that the water temperature will not be controlled, which could lead to a person being scalded while using the bath facilities, which could lead to harm.

Attributions 3.7.2.9.(1)(d) [F30-OS3.1]

Intent: To limit the probability that the absence of grab bars will lead to people slipping or falling, which could lead to harm.

Sentence 3.7.2.9.(1) requires all bathtubs in hotels and motels to be generally useable by individuals.

A water closet and lavatory may project into the clear space and may even assist people entering the bathtub, but they cannot be located such that they could limit people from entering the bathtub.

Recessed fixtures and wall-mounted fixtures with deep recesses on the underside greatly improve wheelchair maneuverability.

3.7.2.10. Accessible Washrooms

1) Where washrooms, baths or showers are required to be *accessible*, they shall conform to Subsection 3.8.3. (See Note A-3.8.)

Application and design requirements for accessible plumbing facilities are found in Section 3.8. of the British Columbia Building Code 2018.

Only the British Columbia Building Code content directly related to accessibility is reproduced in this handbook.

Section 9.5. Design of Areas and Spaces

9.5.2. Access for Persons with Disabilities

9.5.2.1. General

1) Except as provided in Article 3.8.2.1., every *building* shall be designed in conformance with Section 3.8.

Intent: To expand the application of Section 3.8. to include Part 9 buildings.

9.5.2.2. Protection on Accessible Floor Areas

1) Where *access* is required on any *floor area*, the requirements in Article 3.3.1.7. shall apply.

Intent: To expand the application of Article 3.3.1.7. to include Part 9 buildings where the accessible path of travel is required in Article 9.5.2.1. is provided.

9.5.2.3. Reserved

Section 9.7. Windows, Doors and Skylights

9.7.2. Required Windows, Doors and Skylights

9.7.2.2. Reserved

Section 9.8. Stairs, Ramps, Landings, Handrails and Guards

9.8.5. Ramps

9.8.5.1. Application

1) This Subsection applies to pedestrian ramps, except ramps in an *accessible* path of travel.

Intent: To state the application of Subsection 9.8.5.

2) Ramps in an *accessible* path of travel shall conform to the requirements in Section 3.8.

Intent: To modify the application of Article 3.8.3.5. to apply to Part 9 buildings that are required [in Sentence 9.5.2.1.(1)] to include an accessible path of travel.

Intent: Also to modify the application of Article 9.8.5.2. to 9.8.5.5.

9.8.6. Landings

9.8.6.1. Application

1) This Subsection applies to landings, except landings in an *accessible* path of travel.

Intent: To state the application of Subsection 9.8.6.

2) Landings for ramps in an *accessible* path of travel shall conform to the requirements in Section 3.8.

Intent: To expand the application of Article 3.8.3.5. to Part 9 buildings that are required [in accordance with Sentence 9.5.2.1.(1)] to include an accessible path of travel.

Intent: To supersede the application of Article 9.8.6.2. to Article 9.8.6.4.

9.8.6.5. Tactile Warning

1) Landings required at the top of a *flight* of stairs shall be provided with tactile walking surface indicators conforming to Subsection 3.8.3. unless the stairs are

Attributions [F30-OS3.1]

a) stairs within *dwelling units* or serving not more than two *dwelling units*,

b) *exit* stairs not normally used for access purposes, and

c) fire escape stairs.

Section 9.9. Means of Egress

9.9.6. Doors in a Means of Egress

9.9.6.8. Effort Required to Open

1) Every *exit* door, except doors serving a single *dwelling unit* or a house with a *secondary suite* including their common spaces, shall be designed and installed so that when the latch is released the door will open in the direction of *exit* travel under a force of not more than 90 N applied to the door release hardware. (See Sentence 3.8.3.6.(8) for door opening forces in an *accessible* path of travel.)

Attributions [F10-OS3.7]

Intent: To limit the probability of delays in opening exit doors in an emergency situation, which could lead to delays in the evacuation or movement of people to a safe place, which could lead to harm.

Section 9.31. Plumbing Facilities

9.31.1. Scope

9.31.1.1. Application

1) This Section applies to the plumbing facilities and *plumbing systems* within *dwelling units*.

Intent: To state the application of Section 9.31.

2) In occupancies other than *dwelling units*, plumbing facilities, grab bars, floor drains, and floor and wall finishes around urinals shall conform to Subsection 3.7.2. (See also Section 3.8. regarding *accessible* plumbing facilities.)

Intent: To expand the application of Subsection 3.7.2. to plumbing facilities, grab bars, floor drains, and floor and wall finishes around urinals in Part 9 buildings other than facilities in dwelling units.

Only the British Columbia Building Code content directly related to accessibility is reproduced in this handbook.

Section 2.2. Administration

2.2.2. Information Required for Proposed Work

2.2.2.2. Site Plans

2) Site plans shall show

a) by dimensions from property lines, the location of the proposed *building*,

b) the similarly dimensioned location of every adjacent existing *building* on the property,

c) existing and finished ground levels to an established datum at or adjacent to the site,

d) the access route for firefighting, and

e) the *accessible* paths of travel to the *building* from

i) the sidewalk, roadway or *street*, and

ii) if provided, exterior parking stalls for *persons with disabilities* and exterior passenger-loading zones.

Only the British Columbia Building Code content directly related to accessibility is reproduced in this handbook.

Section 2.1. Application

2.1.1. Application

2.1.1.2. Application of Objectives

5) Objective OA, Accessibility (including Objectives OA1, Accessible Path of Travel, and OA2, Accessible Facilities), does not apply to

a) *dwelling units*, row houses, boarding houses, lodging houses and construction camps, except as required by
   i) Article 3.8.2.12. of Division B, or
   ii) Subsection 3.8.5. of Division B,
b) apartment and condominium *buildings* except to the extent described in Subsection 3.8.2. of Division B,
c) *high-hazard industrial occupancies*,
d) *buildings* that are not intended to be occupied on a daily or full-time basis, including automatic telephone exchanges, pump houses and substations,
e) public toilet *buildings* described in Clause 3.8.2.1.(1)(e) of Division B, and
f) the *storeys* described in Clauses 3.8.2.1.(1)(f) and (g) of Division B.

The British Columbia Building Code changes to Article 2.1.1.2. of Division A reflect changes to Subsection 3.8.2., which establishes the application of design requirements related to accessibility.

Section 2.2. Objectives

2.2.1. Objectives

2.2.1.1. Objectives

The complete list of objectives is found in Article 2.2.1.1. of Division A of the British Columbia Building Code. Only the objectives attributed to provisions reproduced in this handbook are shown.

1) The objectives of this Code are as follows (See Note A-2.2.1.1.(1)):

OS Safety

An objective of this Code is to limit the probability that, as a result of the design, construction or demolition of the *building*, a person in or adjacent to the *building* will be exposed to an unacceptable risk of injury.

OS1 Fire Safety

An objective of this Code is to limit the probability that, as a result of the design or construction of the *building*, a person in or adjacent to the *building* will be exposed to an unacceptable risk of injury due to fire. The risks of injury due to fire addressed in this Code are those caused by –

OS1.2 – fire or explosion impacting areas beyond its point of origin

OS1.5 – persons being delayed in or impeded from moving to a safe place during a fire emergency

OS3 Safety in Use

An objective of this Code is to limit the probability that, as a result of the design or construction of the *building*, a person in or adjacent to the *building* will be exposed to an unacceptable risk of injury due to hazards. The risks of injury due to hazards addressed in this Code are those caused by –

OS3.1 – tripping, slipping, falling, contact, drowning or collision

OS3.2 – contact with hot surfaces or substances

OS3.7 – persons being delayed in or impeded from moving to a safe place during an emergency (See Note A-2.2.1.1.(1))

OH Health

An objective of this Code is to limit the probability that, as a result of the design or construction of the *building*, a person will be exposed to an unacceptable risk of illness.

OH2 Sanitation

An objective of this Code is to limit the probability that, as a result of the design or construction of the *building*, a person in the *building* will be exposed to an unacceptable risk of illness due to unsanitary conditions. The risks of illness due to unsanitary conditions addressed in this Code are those caused by –

OH2.1 – exposure to human or domestic waste

OH2.3 – inadequate facilities for personal hygiene

OA Accessibility

An objective of this Code is to limit the probability that, as a result of the design or construction of the *building*, *persons with disabilities* will be unacceptably impeded from accessing or using the *building* or its facilities (see Sentence 2.1.1.2.(5) for application limitations).

OA1 Accessible Path of Travel

An objective of this Code is to limit the probability that, as a result of the design or construction of the *building*, *persons with disabilities* will be unacceptably impeded from accessing the *building* or circulating within it (see Sentence 2.1.1.2.(5) for application limitations).

OA2 Accessible Facilities

An objective of this Code is to limit the probability that, as a result of the design or construction of the *building*, *persons with disabilities* will be unacceptably impeded from using the *building's* facilities (see Sentence 2.1.1.2.(5) for application limitations).

Only the British Columbia Building Code content directly related to accessibility is reproduced in this handbook.

Section 3.1. Application

3.1.1. Application

3.1.1.2. Application of Functional Statements

1) Except as provided in Sentences (2) to (4), the functional statements described in this Part apply

a) to all *buildings* covered in this Code (see Article 1.1.1.1.), and

b) only to the extent that they relate to compliance with this Code as required in Article 1.2.1.1.

2) Functional Statement F56 applies only to *dwelling units*.

3) Functional Statements F73 and F74 do not apply to

a) *dwelling units*, row houses, boarding houses, lodging houses and construction camps, except as required by

i) Article 3.8.2.12. of Division B, or

ii) Subsection 3.8.5. of Division B,

b) apartment and condominium *buildings* except to the extent described in Subsection 3.8.2. of Division B,

c) *high-hazard industrial* occupancies,

d) *buildings* that are not intended to be occupied on a daily or full-time basis, including automatic telephone exchanges, pump houses and substations,

e) public toilet *buildings* described in Clause 3.8.2.1.(1)(e) of Division B, and

f) the *storeys* described in Clauses 3.8.2.1.(1)(f) and (g) of Division B.

4) Functional Statement F75 applies only to

a) one *storey adaptable dwelling units* in multiple unit *residential occupancy buildings* that contain interior corridors or exterior passageways for *access* to the *dwelling units*, and

b) the paths of travel and common facilities intended for use by the residents of the adaptable *dwelling units* described in Clause (a).

Section 3.2. Functional Statements

3.2.1. Functional Statements

3.2.1.1. Functional Statements

The complete list of functional statements is found in Article 3.2.1.1. of Division A of the British Columbia Building Code. Only the functional statements attributed to provisions reproduced in this handbook are shown.

1) The objectives of this Code are achieved by measures, such as those described in the acceptable solutions in Division B, that are intended to allow the *building* or its elements to perform the following functions (see Note A-3.2.1.1.(1)):

F03 To retard the effects of fire on areas beyond its point of origin.

F05 To retard the effects of fire on emergency egress facilities.

F06 To retard the effects of fire on facilities for notification, suppression and emergency response.

F10 To facilitate the timely movement of persons to a safe place in an emergency.

F11 To notify persons, in a timely manner, of the need to take action in an emergency.

F12 To facilitate emergency response.

F20 To support and withstand expected loads and forces.

F30 To minimize the risk of injury to persons as a result of tripping, slipping, falling, contact, drowning or collision.

F31 To minimize the risk of injury to persons as a result of contact with hot surfaces or substances.

F71 To provide facilities for personal hygiene.

F72 To provide facilities for the sanitary disposal of human and domestic wastes.

F73 To facilitate *access* to and in the *building* and its facilities by *persons with disabilities* (see Sentence 3.1.1.2.(3) for application limitation).

F74 To facilitate the use of the *building's* facilities by *persons with disabilities* (see Sentence 3.1.1.2.(3) for application limitation).

F75 To minimize obstacles for future modification to provide *access* (see Sentence 3.1.1.2.(4) for application limitation).

F81 To minimize the risk of malfunction, interference, damage, tampering, lack of use or misuse.

Appendices

Slip-resistance

The following table is a general guide for slip-resistance of materials based on coefficient of friction testing.

Slip-resistance of Floor and Tread Finishes		
Material	**Slip Resistance**	
	Dry and Unpolished	**Wet**
Carpet	Very good	Good
Clay tiles	Good	Poor to fair
Clay tiles, textured finish or non-slip granules	Very good	Good
Concrete	Good	Poor to fair
Concrete, textured finish or non-slip aggregate	Very good	Good
Linoleum	Good	Poor to fair
Rubber, sheet or tiles	Very good	Very good
Sheet vinyl	Good	Poor to fair
Sheet vinyl, non-slip granules	Very good	Good
Terrazzo	Good	Poor to fair

Note: Slip-resistance of very good and good is acceptable.
Slip-resistance of poor to fair is not acceptable.

Slip-resistant surfaces of ramps, landings and stairs of exit facilities is required in Sentence 3.4.6.1. of Division B.

3.4.6. Types of Exit Facilities

3.4.6.1. Slip-Resistance of Ramps and Stairs

1) The surfaces of ramps, and landings and treads

a) shall have a finish that is slip resistant, and

b) if accessible to the public, shall have either a colour contrast or a distinctive pattern, readily visible from both directions of travel, to demarcate the leading edge of the tread and the leading edge of the landing, as well as the beginning and end of a ramp.

Sentence 3.4.6.1.(1) applies to surfaces of ramps and stairs in exit facilities and requires finishes that are slip-resistant to ensure walking surfaces are accessible.

Making the nosing a sharply contrasting colour to the remainder of the tread is a preferred and easy method to make them readily apparent from both directions of travel. However, careful material selection and lighting design can permit the use of a single material and colour.

Handrails

Division B, Article 3.4.6.5.

Handrails are helpful to a variety of users, providing support and stability when using ramps and stairs.

Graspable Handrails, Sentence 3.4.6.5.(5)

Sharp or abrasive elements on handrails may harm users. Individuals who depend on using handrails would likely apply a larger force or grasp the handrail more fully when negotiating stairs or ramps.

A change was made in the 2018 edition of the British Columbia Building Code to require that all handrails be free of any sharp or abrasive elements.

Furthermore, the notion of "graspable portion" of handrails stated in the previous edition was difficult to enforce, and may have resulted in a handrail cross-section that did not represent good ergonomics in terms of shape and dimensions. In order to generate substantial pulling forces, the fingers and thumb must be able to wrap around the under surface of the handrail and not only over a graspable portion of the handrail.

Therefore, the term graspable portion was deleted to enable handrails with irregular cross-section to:

- permit hand approach from all directions in both normal use and emergency fall-arrest conditions,
- allow a firm grip,
- work for a wide range of hand sizes, and
- take into consideration the challenges of those with disabilities, who have limited strength and balance and may fall on stairs.

Continuously Graspable Handrails, Sentence 3.4.6.5.(9)

The provisions in the previous edition of the British Columbia Building Code regarding continuity of handrails did not reflect the intent stated in the Appendix Note. In some cases, the requirement limited design flexibility and was confusing. In other cases, the requirement allowed situations that contradicted Code intent.

The new wording in the 2018 edition of the British Columbia Building Code states that handrails shall be provided for the full length of the stair flight, from the bottom to the top riser, complying with the intent stated in explanatory Note A-9.8.7.2. and other international regulations.

Handrail Height, Sentence 3.4.6.5.(7)

The requirements in previous editions limited handrail height to 965 mm. However, studies have shown that higher handrails perform as well as lower handrails. Handrails installed at a height of up to 1070 mm are now permitted. This 2018 change:

- offers more flexibility in design,
- permits that handrails be located at the top of guards up to 1070 mm, and
- harmonizes the requirement of handrail height on stair flight and landing, which allows a smoother handrail transition between stairs and landings.

This change also applies to ramps except for those located in the accessible path of travel.

Reachable Handrails, Sentence 3.4.6.5.(3)

The previous rule required intermediate handrails in wide stairs where the width was exceeding 2200 mm. The reachability of a handrail based on an ergonomic analysis and field observations indicated that the maximum distance to a handrail should not exceed 750 mm.

The 2018 edition of the British Columbia Building Code requires that intermediate handrails be provided so that:

- a handrail is reachable within 750 mm,
- at least one portion of the stair or ramp between two handrails is the minimum width required, and
- all other portions of the stair or ramp between two handrails have a clear width of 510 mm or more.

The 2018 edition of the British Columbia Building Code also clarifies that handrails shall be located along the most direct path of travel, where a stair or ramp is wider than its required exit width.

Handrails in Step Aisles, Article 3.3.2.10.

In previous editions, the installation of handrails in aisles with steps serving assembly occupancies such as stadiums and arenas was not mandatory. Following injuries and based on research and on the review of international practice on this issue, a new requirement on handrails in aisles with steps was added allowing various configurations that will enhance the safety in use for spectators in assembly occupancies, without limiting the normal circulation of a crowd (moving in counter-flow or passing others).

Wheelchair Dimensions

Figure A-1 shows dimensions of a “traditional” wheelchair which is still in use. It is provided for general information purposes and to illustrate the need for many of the dimensional requirements contained in Section 3.8.

It cannot be overstated that other mobility devices and aids in use may have very different dimensions and different maneuvering capabilities than a traditional wheelchair. The dimensions required in the Code are minimums based on this traditional wheelchair and designers will want to consider the types of mobility devices and aids currently in use and enlarge spaces and clearances appropriately.

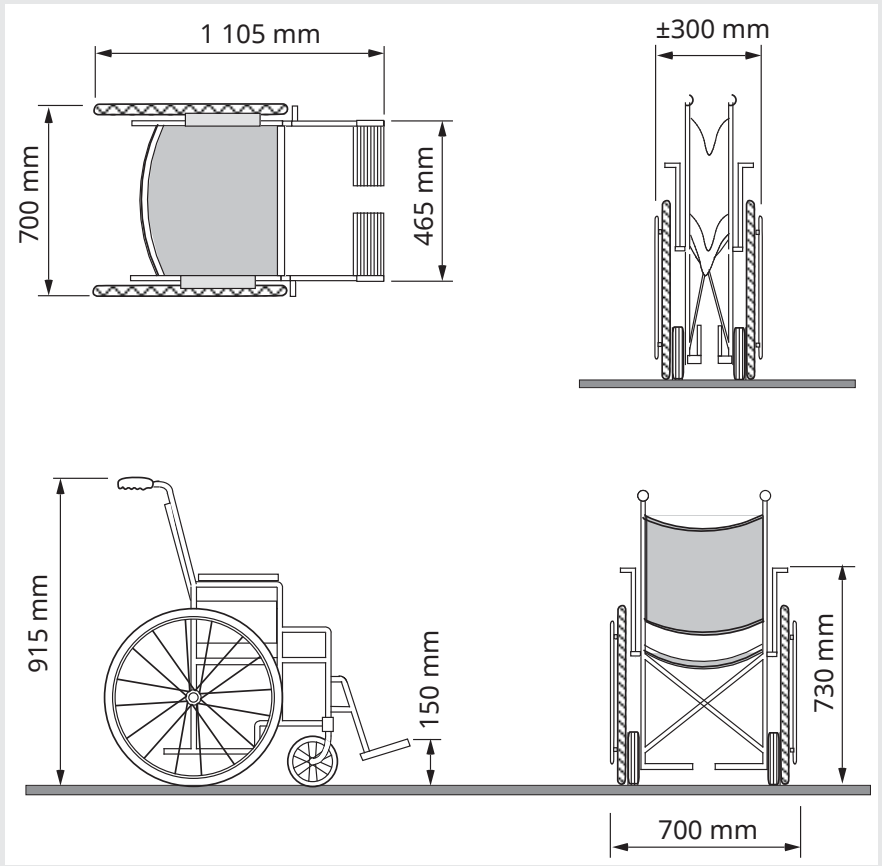

Figure A-1
Traditional wheelchair dimensions

Reach

Figures A-2 and A-3 illustrate comfortable reaches somewhat common to people with full upper body mobility in standing and sitting positions, such as from a seated position while using a wheelchair. They are provided for general information and comparison purposes only to illustrate the need for many of the dimensional requirements contained in the Code. Extreme reaches should be avoided, and consideration should be given to occupants with various mobility ranges.

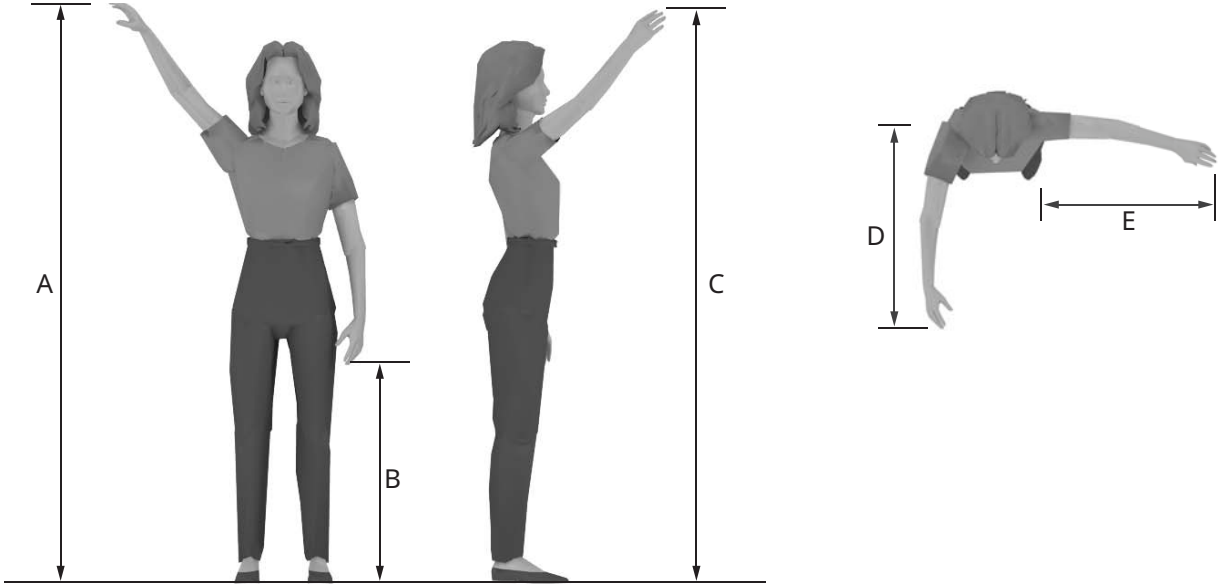

Figure A-2
Reach of standing person

Reach of Standing Person, mm			
Reach	**Adult Male, Height 1740 mm**	**Adult Female, Height 1605 mm**	**Child, 6-9 years, Height 1245 mm**
A – High, side	2002	1849	1423
B – Low, side	762	665	499
C – High, forward	1928	1786	1372
D – Forward	638	592	462
E – Side	727	673	524

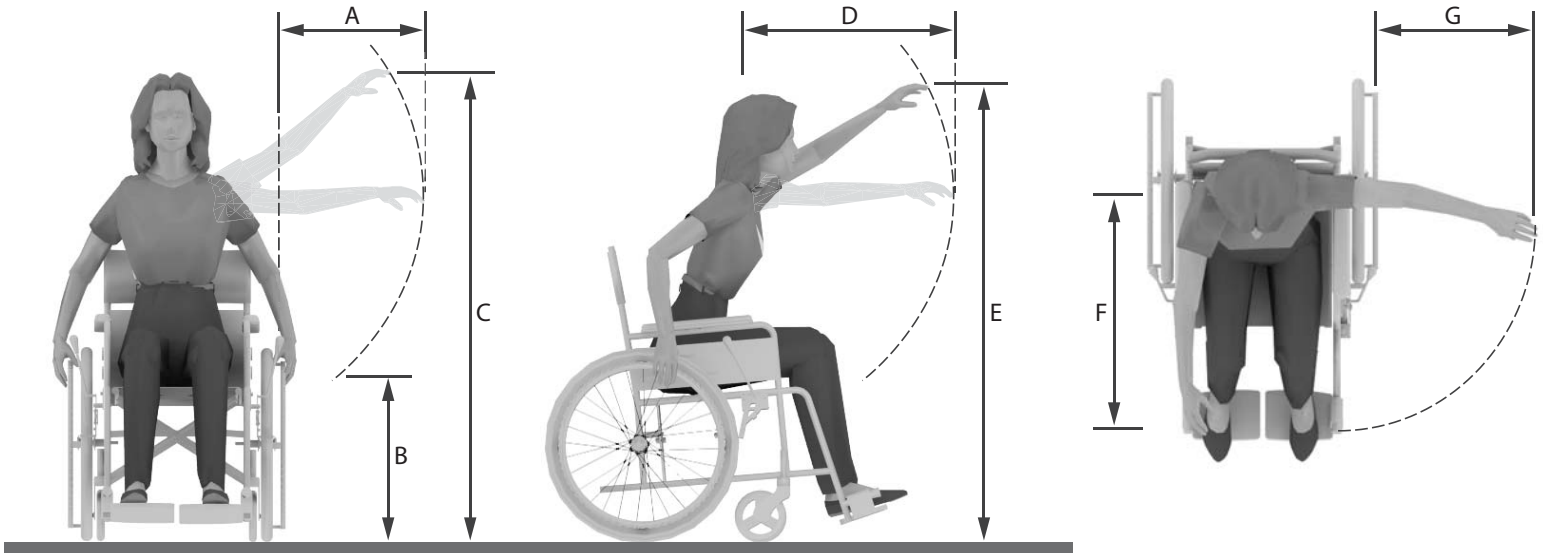

Figure A-3
Reach of person in a seated position

Reach of Seated Person, mm			
Reach	**Adult Male, Height 1740 mm**	**Adult Female, Height 1605 mm**	**Child, 6-9 years, Height 1245 mm**
A – Mid, side	505	439	300
B – Low, side	338	439	508
C – High, side	1641	1506	1237
D – Max, forward	922	869	668
E – High, forward	1410	1308	965
F – Forward	541	513	389
E – Side	505	439	300

Classification of Building Use

The Building Code classifies buildings according to their use. The purpose of classification is to establish which Code requirements are applicable. Most buildings are classified as containing a single "major" occupancy although there are usually other "minor" occupancies in the building which are integral with the major occupancy and considered subsidiary to it. If a building contains more than one major occupancy, such as a hotel (Group C, residential) with restaurants and conference rooms on the main floor (Group A, assembly), the Code stipulates the building must comply with the requirements for each major occupancy it contains.

The following are examples of the major occupancy classifications described in Table 3.1.2.1. and Note A-3.1.2.1.(1) of Division B of the British Columbia Building Code and referred to throughout this handbook:

Group A, Division 1 Assembly
Motion picture theatres
Opera houses
Television studios admitting a viewing audience
Theatres, including experimental theatres
Group A, Division 2 Assembly
Art galleries
Auditoria
Bowling alleys
Churches and similar places of worship
Clubs, nonresidential
Community halls
Courtrooms
Dance halls
Daycare Facilities for Children

Exhibition halls (other than classified in Group E)
Gymnasia
Lecture halls
Libraries
Licensed beverage establishments
Museums
Passenger stations and depots
Recreational piers
Restaurants
Schools and colleges, nonresidential
Undertaking premises
Group A, Division 3 Assembly
Arenas
Indoor swimming pools, with or without spectator seating
Rinks

Group A, Division 4 Assembly
Amusement park structures (not elsewhere classified)
Bleachers
Grandstands
Reviewing stands
Stadia
Group B, Division 1 Detention
Jails
Penitentiaries
Police stations with detention quarters
Prisons
Psychiatric hospitals with detention quarters
Reformatories with detention quarters
Group B, Division 2 Treatment
Care facilities with treatment
Convalescent /recovery/rehabilitation centres with treatment
Hospices with treatment
Hospitals
Infirmaries
Nursing homes with treatment
Psychiatric hospitals without detention quarters
Respite centres with treatment
Group B, Division 3 Care
Assisted/supportive living facilities
Care facilities without treatment
Children's custodial homes
Convalescent/recovery/rehabilitation centres without treatment
Group homes
Hospices without treatment
Nursing homes without treatment
Reformatories without detention quarters
Respite centres without treatment
Group C Residential
Apartments
Boarding houses
Clubs, residential
Colleges, residential
Convents
Dormitories
Hotels
Houses
Lodging houses
Monasteries
Motels
Schools, residential
Group D Business and personal service
Banks
Barber and hairdressing shops

Beauty parlours
Dental offices
Dry cleaning establishments, self-service, not using flammable or explosive solvents or cleaners
Laundries, self-service
Medical offices
Offices
Police stations without detention quarters
Radio stations
Small tool and appliance rental and service establishments
Group E Mercantile
Department stores
Exhibition halls
Markets
Shops
Stores
Supermarkets
Group F, Division 1 High-hazard industrial
Bulk plants for flammable liquids
Bulk storage warehouses for hazardous substances
Cereal mills
Chemical manufacturing or processing plants
Distilleries
Dry cleaning plants

Feed mills
Flour mills
Grain elevators
Lacquer factories
Mattress factories
Paint, varnish and pyroxylin product factories
Rubber processing plants
Spray painting operations
Waste paper processing plants
Group F, Division 2 Medium-hazard industrial
Aircraft hangars
Box factories
Candy plants
Cold storage plants
Dry cleaning establishments not using flammable or explosive solvents or cleaners
Electrical substations
Factories
Freight depots
Helicopter landing areas on roofs
Laboratories
Laundries, except self-service
Mattress factories
Planing mills

Printing plants
Repair garages
Salesrooms
Service stations
Storage rooms
Television studios not admitting a viewing audience
Warehouses
Wholesale rooms
Woodworking factories
Workshops
Group F, Division 3 Low-hazard industrial
Creameries
Factories

Laboratories
Light-aircraft hangars (storage only)
Power plants
Salesrooms
Sample display rooms
Storage garages, including open air parking garages
Storage rooms
Warehouses
Workshops

Building Height and Building Area Explanation

In order to determine what Code requirements apply to a building, it is necessary to determine not only its major occupancy, but also its height and area. The higher and/or larger a building is, the more stringent the Code's fire and life safety requirements. Building height and area also have limited effect on accessibility requirements.

Building height is measured in storeys above grade and is defined as "...the number of storeys contained between the roof and the floor of the first storey..." (see the definition of building height in Sentence 1.4.1.2.(1) of Division A of the British Columbia Building Code). The key here is the term "first storey" which is defined as the "...uppermost storey having its floor level not more than 2 m above grade..." This means a storey which is partly below grade might not be included in a building's height for Code classification purposes. Therefore, a building of two storeys in "building height" may contain more than two storeys, e.g., a two storey apartment block with a basement level partly above grade. Such a building is considered as two storeys in building height but contains three storeys.

Building area is defined as "...the greatest horizontal area of a building above grade within ... exterior walls or within ... exterior walls and ... firewalls..." In most cases, this is the area of the first storey. It is not the sum of the areas of all storeys in the building. The best way to describe building area for the purposes of the Building Code is to start by viewing the building from above. From this bird's eye perspective, trace around the apparent outside perimeter. This will include portions of storeys that may project beyond the exterior walls of lower storeys.

Other Standards

The British Columbia Building Code is a minimum standard. Designing for greater levels of accessibility is not only permitted but encouraged. The number and type of accessible facilities provided in the building may increase in order to serve the occupants.

The designer considers the specific occupants' needs and adjusts the design accordingly. One example may be increasing widths when it is expected that motorized mobility devices wider than the traditional wheelchair, shown in Figure A-1 of this Appendix, will be used.

There are many codes and standards that designers can look to for additional guidance. The British Columbia Building Code 2018 has drawn on a number of Canadian and international examples including the following:

National Building Code of Canada	nrc.canada.ca/en
CSA B651 Accessible Design for the Built Environment	www.csagroup.org
Alberta Building Code	www.alberta.ca
Manitoba Building Code	www.gov.mb.ca
Ontario Building Code	www.mah.gov.on.ca
Quebec Construction Code	www.rbq.gouv.qc.ca
Nova Scotia Building Code	www.novascotia.ca
City of Guelph, Ontario – Facility Accessibility Design Manual	www.guelph.ca
City of London, Ontario – Facility Accessibility Design Standards	www.london.ca
City of Mississauga, Ontario – Facility Accessibility Design Standards	www.mississauga.ca
Americans with Disabilities Act	www.dol.gov
International Building Code	www.iccsafe.org

Programs and Resources

Programs and services are available for people living with a disability in British Columbia. For more information visit the followig web pages.

Accessibility Programs:

BC Housing Design Guidelines and Construction Standards: https://www.bchousing.org/partner-services/asset-management-redevelopment/construction-standards

Canada Mortgage and Housing Corporation Accessible Design Guidelines: https://www.cmhc-schl.gc.ca/en/developing-and-renovating/accessible-adaptable-housing

Home Adaptations for Independence (HAFI) Program: https://www.bchousing.org/housing-assistance/HAFI

Rick Hansen Foundation Accessibility Certification: https://www.rickhansen.com/become-accessible/rating-certification

British Columbia Government Resources:

Accessibility & Inclusion Toolkit: https://www2.gov.bc.ca/gov/content/home/accessible-government/toolkit

Creating Accessible Adobe PDF Documents: https://www2.gov.bc.ca/gov/content/home/accessible-government/toolkit/documents/adobe-pdf

Employee Accessibility Advisory Committee @Work Section: https://gww.gov.bc.ca/groups/accessibility-bc-public-service/resources

Plain Language Guide: https://www2.gov.bc.ca/gov/content/governments/services-for-government/policies-procedures/web-content-development-guides/writing-for-the-web/plain-language-guide

Visit the Government of British Columbia website to find programs and services offered through government, crown agencies, and corporations: https://www2.gov.bc.ca/gov/content/family-social-supports/services-for-people-with-disabilities/supports-services

Words Matter - Guidelines on Using Inclusive Language in the Workplace: https://www2.gov.bc.ca/assets/gov/careers/all-employees/working-with-others/words-matter.pdf